CODIGO **52660**

DESCRIPCION: **DOLPHIN 2X2**

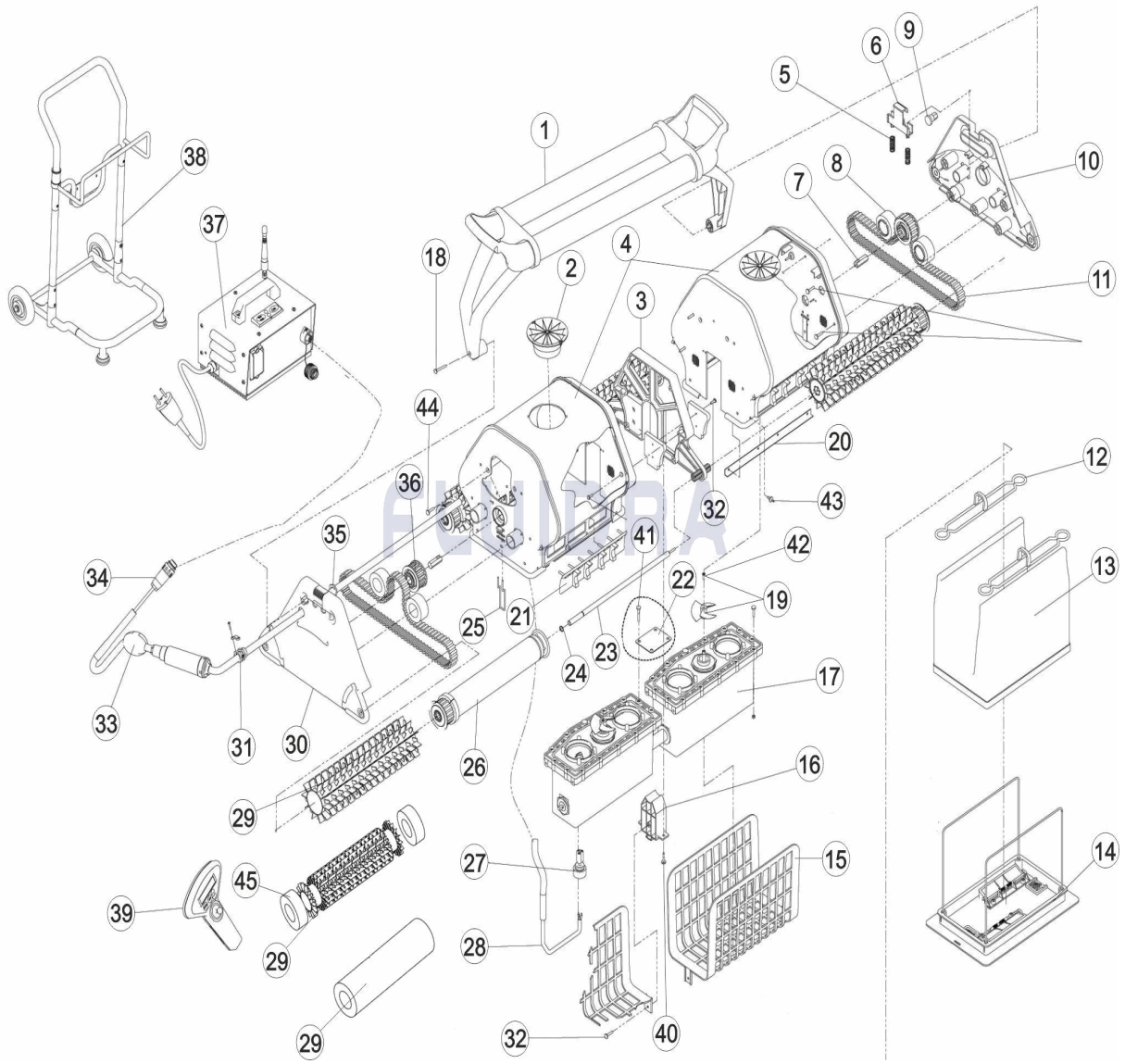

ESPAÑOL

POS	CODIGO	DESCRIPCION CANTIDAD	POS	CODIGO	DESCRIPCION CANTIDAD
1	99957049-ASSY	MANGO 2X2 GYRO	13	99954304-ASSY	BOLSA FILTRO 50 MICRAS C/AGUJEROS
2	9995070	BOQUILLA SUPERIOR AMARILLA DOLPHIN	13	99954308-ASSY	BOLSA FILTRO 70 MICRAS
3	9987602	DIVISOR PARA DOLPHIN 2 X 2	14	9995550	TAPA COMPLETA AÑO 2005
4	9995196	CARCASA EXTERIOR 2X2 PARA STKR	15	6203703	REJILLA PREFILTRO DOLPHIN
5	3917031	MUELLE SOPORTE MANGO DOLPHIN	16	9987601	CLIP PARA MOTOR DOLPHIN 2 X 2
6	9985070	SOPORTE MANGO 2X2	17	9995342RD-ASSY	MOTOR 2X2 NUEVO ASSY RD
7	3865005	ADAPTADOR HEXAGONAL POLEA NUEVA	17	9995341RD-EX	MOTOR 2X2 RD
8	3884997	RUEDA GUIA DOLPHIN	18	3305030-A	TORNILLO KA 50X30
9	9985065	TAPON MANGO	19	9995269	ELICE IMPULSION+TORNILLO DC
10	9981082	PLACA LATERAL AZUL 2 X 2	20	3870010	RETENEDOR ENTRADA CARCASA
11	9985007	CORREA TRACCION AMARILLA-MODELO 2	21	9985280	ALA ANTIRETORNO DIAG. - GRIS
12	9981430	CLIP BOLSA FILTRO DOLPHIN	22	9991000	TAPA FIJACION CON TORNILLOS
13	9995431-ASSY	BOLSA FILTRO 150 MICRAS	23	5581004	EJE DE ACERO INOXIDABLE P/CONJUNTO

CODIGO **52660**

DESCRIPCION: **DOLPHIN 2X2**

13	9995430-ASSY	BOLSA DOLPHIN 50 MICRAS	24	3506799	ANILLO ELÁSTICO DIA.8MM A2
13	9991440-ASSY	PACK 5 BOLSAS DESECHABLES PARA FILT	25	3965030	PASADOR CARCASA DOLPHIN
26	99955954-ASSY	RODILLO DE ARRASTRE 2X2	34	5000009	ENCHUFE CABLE TRANSFORMADOR
27	9991277	CJTO CONECTOR MOTOR 2X2	35	Z3967136	TUERCA PRENSACABLES PG-13,5
28	9995748LF-ASSY	CABLE FLOTANTE 40 M. 2 X 2	36	3883645	POLEA PARA LIMPIAFONDOS 2 X 2
28	9995754LF-ASSY	CABLE FLOTANTE 45 M. 2 X 2	37	9995677-ASSY	TRANSFORMADOR 2X2 EUR 2011
28	9995792-ASSY	CABLE FLOTADOR CON GIRO DYN 1,2 M	38	9996093	CARRO DOLPHIN 2*2
29	6101603	CEPILLO PLASTICO AZUL DOLPHIN	39	9995438	MANDO 2X2 (A?O 2004 NUEVA VERSIO N)
29	6101660	CEPILLO PVC PARA CB-AZUL	40	3379616-A	TORNILLO KA 50X16
29	6101610	CEPILLO PARA LIMPIAFONDO " MAGI "	41	3104530	TORNILLO DIN-7985 M-4X30 A2
30	9995059	PLACA LATERAL C/TALADRO PG-AZUL 2X2	42	3101410-A	TORNILLO M 4 X 10
31	3967135	PRENSACABLES PG16,5	43	3000484	TORNILLO M4X15
32	3379720-A	TORNILLO K50X20	44	3154414-A	TORNILLO M-4X14 DIN-7985
33	9995091	FLOTADOR PARA CABLE 2x2	45	6101611	ARO CEPILLO MAGIC PARA CB

CODE **52660**

DESCRIPTION: **DOLPHIN 2X2**

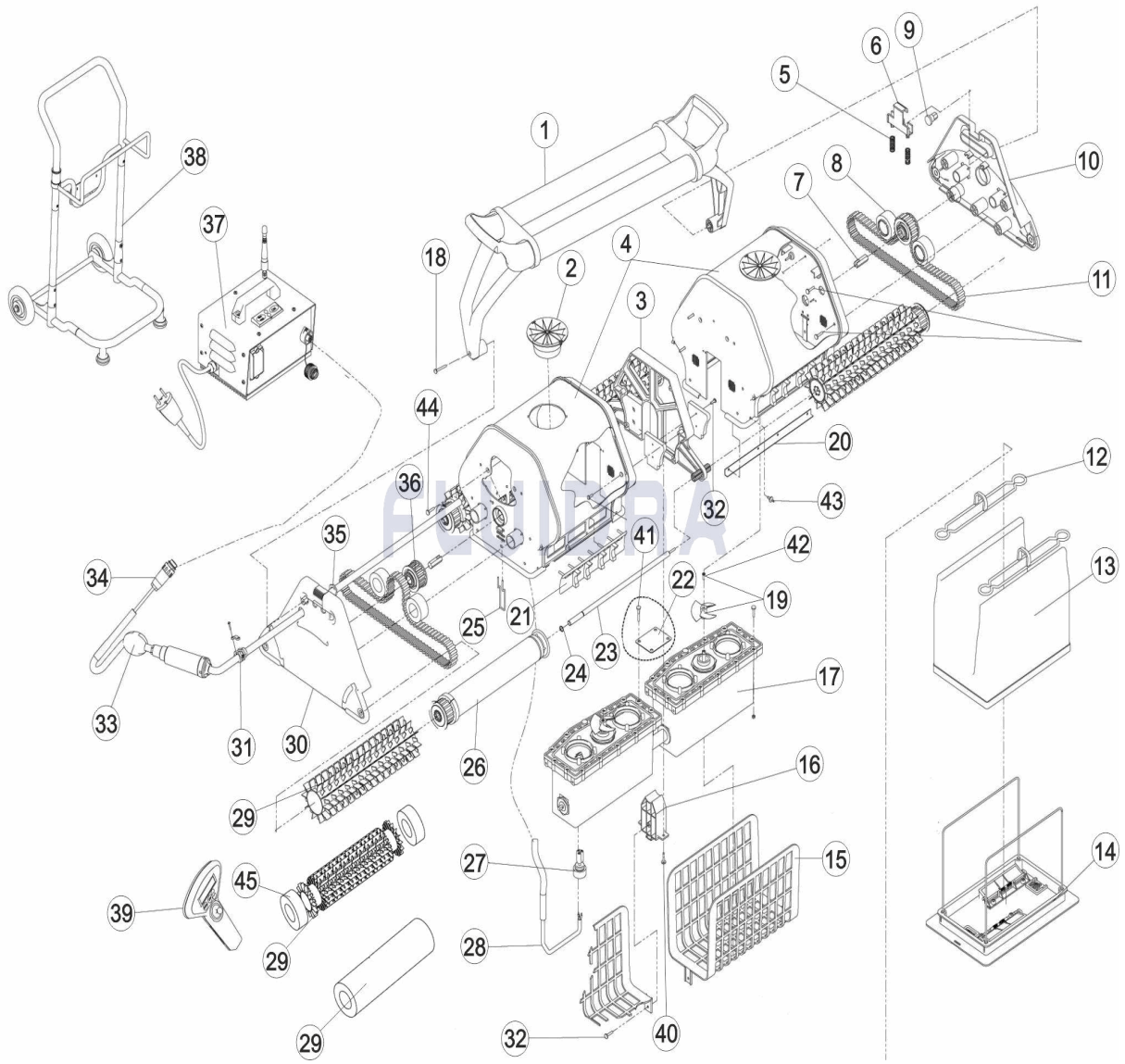

FRANCAIS

POS	CODE	DESCRIPTION QUANTITE	POS	CODE	DESCRIPTION QUANTITE
1	99957049-ASSY	POIGNEE	13	99954304-ASSY	SAC SUPERKLEEN PERFORE
2	9995070	CACHE TURBINE JAUNE	13	99954308-ASSY	SAC FILTRANT 70 MICRONS
3	9987602	SEPARATION CARCASSE 2X2	14	9995550	PORTE SAC DOLPHIN COMPLET
4	9995196	CARROSSERIE DOLPHIN 2X2	15	6203703	GRILLE PROTECTION SAC
5	3917031	RESSORT POIGNEE DOLPHIN	16	9987601	CLIP POUR BLOC MOTEUR 2X2
6	9985070	CLIP POUR CABLE - 9985070	17	9995342RD-ASSY	BLOC MOTEUR 2X2 NEW
7	3865005	ADAPTATEUR ROUE HEXAGONALE - 3865(	17	9995341RD-EX	BLOC MOTEUR 2X2 RECONDTIONNE
8	3884997	ROUE GUIDE DOLPHIN	18	3305030-A	VIS KA50X30 EASYKLEEN
9	9985065	CALE FIXATION/POIGNEE 9985065	19	9995269	TURBINE DOLPHIN
10	9981082	FLASQUE 2X2	20	3870010	ARRET ENTREE CARCASSE -3870010
11	9985007	COURROIE DE TRACTION TT JAUNE	21	9985280	COUV.ENTRAIN. AXE MOTE-9985280
12	9981430	CLIP SAC FILTRANT DOLPHIN	22	9991000	COUVERCLE FIXATION AVEC VIS
13	9995431-ASSY	SAC FILTRANT 150 MICRONS	23	5581004	AXE ACIER INOX/ROUE FIXE

CODE **52660**

DESCRIPTION: **DOLPHIN 2X2**

13	9995430-ASSY	SAC DOLPHIN 50 MICRONS	24	3506799	BAGUE ÉLASTIQUE DIA.8MM A2
13	9991440-ASSY	PAQUET 5 SACS FILTRANT JETABLE	25	3965030	CLIP VERROUILLAGE CARCASSE
26	99955954-ASSY	ROULEAU 2X2 TT	34	5000009	PRISE CABLE TRANSFORMATEUR
27	9991277	CONNEXION CABLE/BLOC MOTEUR	35	Z3967136	ECROU PRESSE ETOUPE
28	9995748LF-ASSY	CABLE 2X2 40 METRES	36	3883645	POULIE TRACTION TT
28	9995754LF-ASSY	CABLE 2X2 45 METRES	37	9995677-ASSY	TRANSFORMATEUR 2X2 2011
28	9995792-ASSY	CABLE AUTOFLOTTANT 1,2M 3 FILS AVEC	38	9996093	CHARIOT 2X2
29	6101603	BROSSE PVC BLEU	39	9995438	TELECOMMANDE DOLPHIN 2X2 VERS 2004
29	6101660	BROSSE PLASTIQUE BLEUE COMBINE	40	3379616-A	VIS KA50X16
29	6101610	BROSSE SUPER MAGIQUE - 6101610	41	3104530	VIS DIN-7985 M-4X30 A2
30	9995059	FLASQUE 2X2 COTE CABLE	42	3101410-A	VIS M 4 X 10
31	3967135	PRESSE ETOUPE CABLE FLOTTANT	43	3000484	VIS M4X15
32	3379720-A	VIS K50X20	44	3154414-A	VIS M-4X14 DIN-7985
33	9995091	FLOTTEUR CABLE 2X2	45	6101611	ANNEAU WONDER BRUSH

CODE **52660**

DESCRIPTION: **DOLPHIN 2X2**

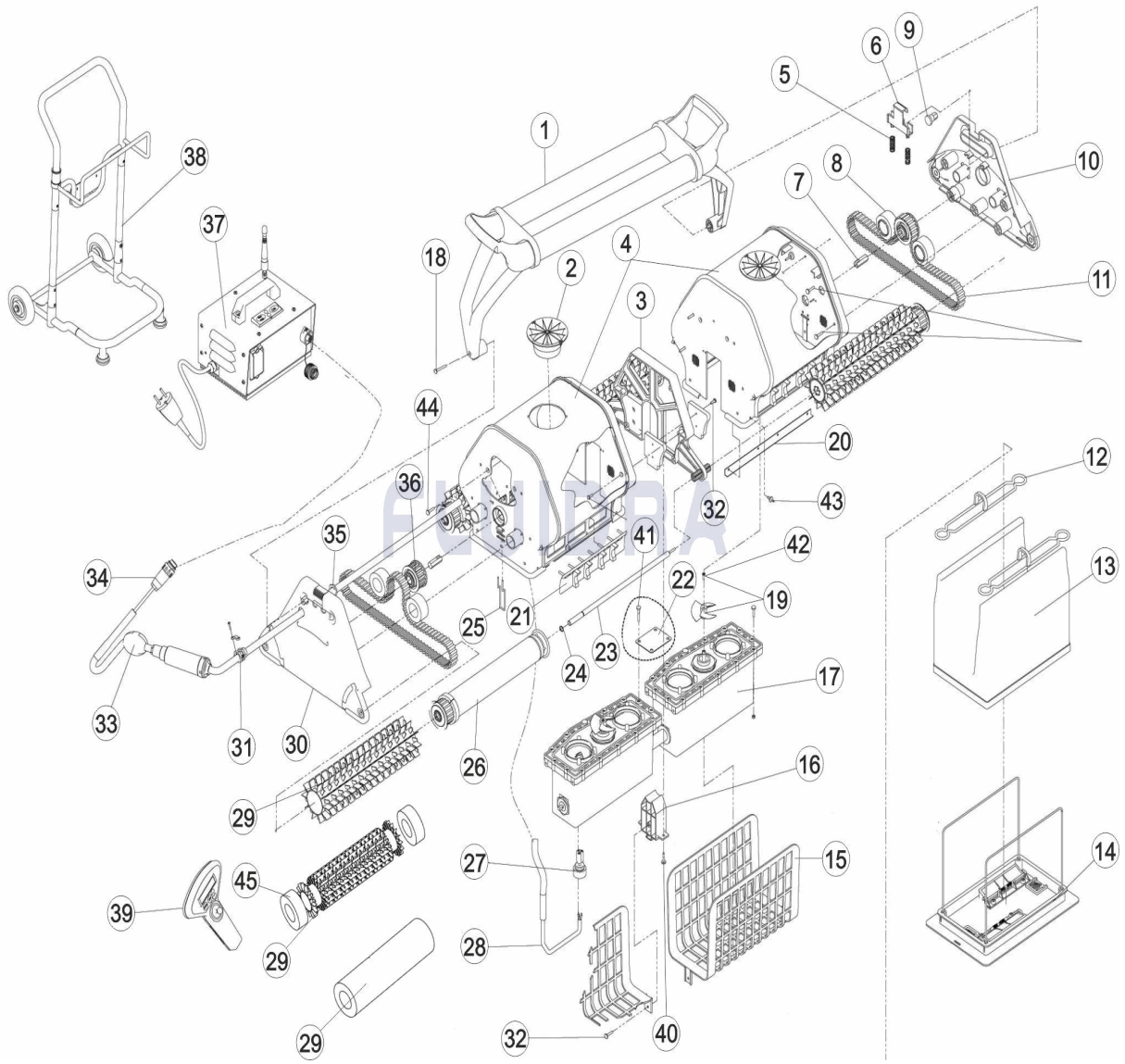

ENGLISH

POS	CODE	DESCRIPTION QUANTITY	POS	CODE	DESCRIPTION QUANTITY
1	99957049-ASSY	HANDLE ASSY 2X2 GYRO	13	99954304-ASSY	FILTER BAG FOR TS FOR DIAG DYN
2	9995070	IMPELLER TUBE-YELLOW	13	99954308-ASSY	FILTER BAG DOLPHIN 70 MICRONS
3	9987602	DIVIDER FOR 2X2	14	9995550	BOTTOM LID ASSY + SUPPORT 2005
4	9995196	OUTER CASING 2X2	15	6203703	FILTER SCREEN
5	3917031	HANDLE CLIP SPRING	16	9987601	MU CLIP 2X2
6	9985070	HANDLE LATCH 2X2	17	9995342RD-ASSY	MU 2X2 NEW ASSY RD
7	3865005	HEXAGON ADAPTOR FOR D TYPE SHAFT	17	9995341RD-EX	MU 2X2 EX RD
8	3884997	GUIDE WHEEL	18	3305030-A	SCREW KA50X30
9	9985065	HANDLE ARM SLIDE	19	9995269	IMPELLER+SCREW DC
10	9981082	SIDE PANEL BLUE FOR 2X2	20	3870010	OC SS STRENGTHNER FOR 2X2
11	9985007	TRACK - TIMING TRACK YELLOW	21	9985280	NON RETURN FLAP DIAG-GREY
12	9981430	FILTER BAG CLIP	22	9991000	SECURING PLATE+SCREWS FOR 2X2 MU
13	9995431-ASSY	FILTER BAG ASSY FOR DIAG AND DYN 150	23	5581004	S.S. SHAFT FOR WHEEL ASSY

CODE **52660**

DESCRIPTION: **DOLPHIN 2X2**

13	9995430-ASSY	FILTER BAG ASSY FOR DIAG AND DYN 50\	24	3506799	CIRCLIP DIA.8MM A2
13	9991440-ASSY	FILTER BAG DISP KIT OF 5 DIG DYN	25	3965030	WIRE CLIP
26	99955954-ASSY	TT WHEEL TUBE ASSY FOR 2X2	34	5000009	AMPHENOL PLUG
27	9991277	CABLE CONN.ASSY.-3PIN DC 2X2	35	Z3967136	PG NUT 2X2 13.5 FOR FLOA.CABLE
28	9995748LF-ASSY	CABLE: SWIVEL ASSY DYNAMIC 40 '	36	3883645	PULLEY FOR FLAT SHAFT - TT
28	9995754LF-ASSY	CABLE: SWIVEL ASSY DYNAMIC 45 '	37	9995677-ASSY	PS 2X2 230V DC
28	9995792-ASSY	CABLE FLOAT SWV 2X2 1.2M ASSY	38	9996093	CADDY 2X2 + PACKING
29	6101603	BRUSH PVC DIAG - BLUE	39	9995438	RCU 2X2 2004 VERS.
29	6101660	BRUSH PVC DIAG BLUE CB	40	3379616-A	SCREW KA50X16
29	6101610	BRUSH WB DIAGNOSTIC	41	3104530	SCREW M4X30 DIN 7985 A2
30	9995059	SIDE PANEL W GROMET 2*2 BLUE	42	3101410-A	SCREW M4X10
31	3967135	PG-13.5 FOR 2X2 FLOATING CABLE	43	3000484	POP NIT 4X15
32	3379720-A	SCREW KA50X20	44	3154414-A	SCREW M4X14 - 7985
33	9995091	CABLE FLOAT ASSY 2X2	45	6101611	BRUSH WB RING FOR CB

CODICE **52660**

DESCRIZIONE: **DOLPHIN 2X2**

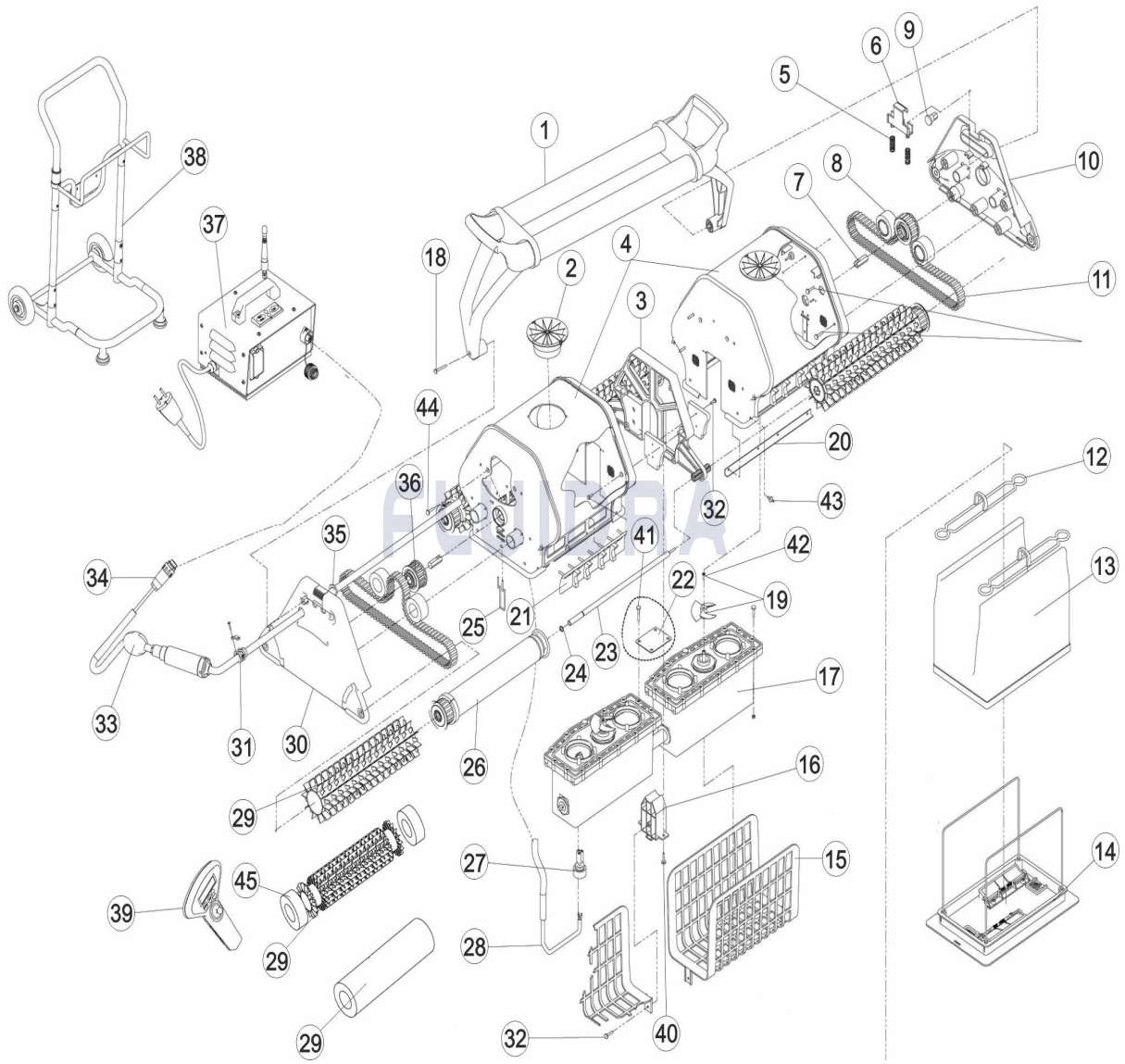

ITALIANO

POS	CODICE	DESCRIZIONE QUANTITA'	POS	CODICE	DESCRIZIONE QUANTITA'
1	99957049-ASSY	MANICO	13	99954304-ASSY	SACCO DOLPHIN CON FORI
2	9995070	COPRIVENTOLA GIALLA D.6H	13	99954308-ASSY	(NOT DEFINED)
3	9987602	DIVISORE DOLPHIN 2X2	14	9995550	CESTELLO COMPLETO PORTA SACCO DOI
4	9995196	CARCASSA D.2X2	15	6203703	RETE COPRIMOTORE DOLPHIN
5	3917031	MOLLA PULSANTE DOL.ASTRAL KLEEN	16	9987601	CLIP X UNITA' MOTORS DOLPHIN 2X2
6	9985070	PULS.GIALLO X MANICO SOLO DOLPHIN 2	17	9995342RD-ASSY	(NOT DEFINED)
7	3865005	ADATT.ESAGONALE PER PULEGGIA 2X2	17	9995341RD-EX	MOTORE 2X2 EX RD
8	3884997	DISCO GUIDA	18	3305030-A	VITE PER MANICO D.2X2
9	9985065	INSERTO FISSA-MANICO DOL.ASTRAL KLE	19	9995269	KIT VENTOLA MOTORE DOLPHIN
10	9981082	(NOT DEFINED)	20	3870010	RINFORZO CARCASSA D.DYN.
11	9985007	(NOT DEFINED)	21	9985280	ALETTA CARCASSA DOL.SUPER KLEEN
12	9981430	CLIP SACCO SPORCO DOLPHIN	22	9991000	(NOT DEFINED)
13	9995431-ASSY	KIT SACCHETTO STAND.ASSY STEEL CLE/	23	5581004	(NOT DEFINED)

CODICE **52660**

DESCRIZIONE: **DOLPHIN 2X2**

13	9995430-ASSY	SACCHETTO FILTRO X DOLPHIN 50 MICRC	24	3506799	ANELLO ELASTICO DIAMETRO 8 MM A2
13	9991440-ASSY	(NOT DEFINED)	25	3965030	PASSANTE INOX X CARCASSA DOLPHIN
26	99955954-ASSY	PALO TRAZIONE DOLPHIN 2X2 -NUOVO-	34	5000009	SPINA TRASF.T/N X DOLPHIN
27	9991277	RETROFIT CAVO DOLPHIN 2X2	35	Z3967136	(NOT DEFINED)
28	9995748LF-ASSY	CAVO S/PLUG X D.2X2 DC (40M) C/SWIVEL	36	3883645	PULEGGIA DI TRAZIONE EASYKLEEN
28	9995754LF-ASSY	CAVO S/PLUG X D.2X2 DC (45M) C/SWIVEL	37	9995677-ASSY	(NOT DEFINED)
28	9995792-ASSY	(NOT DEFINED)	38	9996093	(NOT DEFINED)
29	6101603	SPAZZOLA DOLPHIN: VEDI 01326R0025	39	9995438	TELECOMANDO 2X2 GIALLO
29	6101660	(NOT DEFINED)	40	3379616-A	VITE AUTOF.D.5X16 DOLPHIN
29	6101610	SPAZZOLA DOLPHIN " MAGI "	41	3104530	(NOT DEFINED)
30	9995059	(NOT DEFINED)	42	3101410-A	VITE KA 4X10 MAGICLEAN
31	3967135	PRESSACAVO PER PLUG METALLICO 2X2	43	3000484	RIVETTO 4X15 STEEL CLEAN
32	3379720-A	(not defined)	44	3154414-A	(NOT DEFINED)
33	9995091	FLOTTANTE CAVO ASSY 2X2	45	6101611	ANELLO " MAGIC" X SPAZZOLE COMB "

CODE **52660**

BESCHREIBURG: **DOLPHIN 2X2**

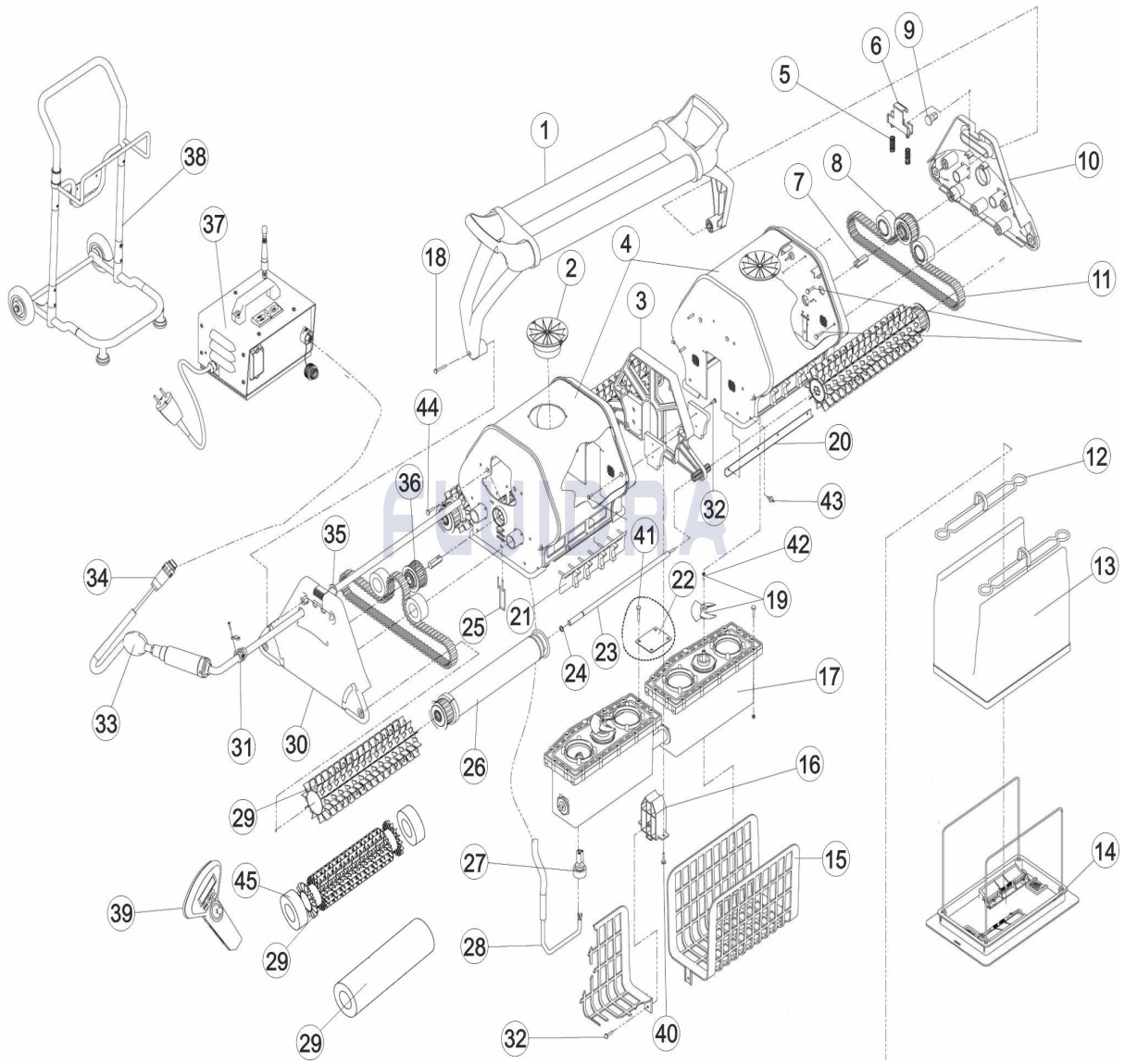

DEUTSCH

POS	CODE	BESCHREIBURG MENGE	POS	CODE	BESCHREIBURG MENGE
1	99957049-ASSY	GRIFF	13	99954304-ASSY	FILTERBEUTEL 50 MIKRON MIT LÖCHERN
2	9995070	OBERE DÜSE GELB DOLPHIN	13	99954308-ASSY	FILTERBEUTEL 70 MIKRON
3	9987602	DISCHAUGLAS FÜR DOLPHIN 2 X 2	14	9995550	ABDECKUNG KOMPLETT JAHR 2005
4	9995196	GEHÄUSE AUSSEN 2 X 2 FÜR STKR	15	6203703	GITTER VORFILTER DOLPHIN
5	3917031	FEDER GRIFFHALTERUNG DOLPHIN	16	9987601	CLIP FÜR MOTOR DOLPHIN 2 X 2
6	9985070	GRIFFHALTERUNG 2 X 2	17	9995342RD-ASSY	MOTOR 2 X 2 NEUVERSION ASSY RD
7	3865005	HEXAGONALADAPTER FÜR ANTRIEBSSCH	17	9995341RD-EX	MOTOR 2 X 2 RD
8	3884997	RAD FÜHRUNG DOLPHIN	18	3305030-A	SCHRAUBE KA 50 X 30
9	9985065	STOPFEN GRIFF	19	9995269	ANTRIEBSSCHRAUBE UND SCHRAUBE DC
10	9981082	PLATINE SEITLICH BLAU 2 X 2	20	3870010	ANSCHLAG EINGANG GEHÄUSE
11	9985007	ZUGRIEMEN GELB - MODELL 2007	21	9985280	RÜCKSCHLAGKLAPPE DIAG. - GRAU
12	9981430	CLIP FILTERBEUTEL DOLPHIN	22	9991000	ABDECKUNG FIXIERUNG MIT SCHRAUBEN
13	9995431-ASSY	FILTERBEUTEL 150 MIKRON	23	5581004	ACHSE EDELSTAHL RADSET

CODE **52660**

BESCHREIBURG: **DOLPHIN 2X2**

13	9995430-ASSY	PACK DOLPHIN 50 MIKRON	24	3506799	ELASTISCHER RING D. 8 MM A2
13	9991440-ASSY	PACK 5 BEUTEL EINWEG	25	3965030	STIFT GEHÄUSE DOLPHIN
26	99955954-ASSY	SCHLEPPROLLE 2 X 2	34	5000009	STECKDOSE KABEL TRAFO
27	9991277	SET VERBINDUNGSSTÜCK MOTOR 2 X 2	35	Z3967136	MUTTER QUETSCHVERSCHRAUBUNG PG1
28	9995748LF-ASSY	KABEL SCHWIMMEND 40 M 2 X 2	36	3883645	ANTRIEBSSCHEIBE FÜR BODENREINIGER
28	9995754LF-ASSY	KABEL SCHWIMMEND 45 M 2 X 2	37	9995677-ASSY	TRAFO 2 X 2 EUR 2011
28	9995792-ASSY	SCHWIMMKABEL DYN 1,2 M SCHWENKBAI	38	9996093	KARREN DOLPHIN 2*2
29	6101603	BÜRSTE KUNSTSTOFF BLAU DOLPHIN	39	9995438	STEUERUNG 2 X 2 (A?O 2004 NEUVERSION
29	6101660	BÜRSTE PVC FÜR CB BLAU	40	3379616-A	SCHRAUBE KA 50 X 16
29	6101610	BÜRSTE FÜR BODENREINIGER " MAGI "	41	3104530	SCHRAUBE DIN-7985 M-4 X 30 A2
30	9995059	PLATINE SEITLICH MIT BOHRUNG PG - BL/	42	3101410-A	SCHRAUBE M 4 X 10
31	3967135	QUETSCHVERSCHRAUBUNG PG16,5	43	3000484	SCHRAUBE M4 X 15
32	3379720-A	SCHRAUBE K50 X 20	44	3154414-A	SCHRAUBE M-4 X 14 DIN-7985
33	9995091	SCHWIMMER FÜR KABEL 2X2	45	6101611	BÜRSTENRING MAGIC FÜR CB

CODIGO **52660**

DESCRICÃO: **DOLPHIN 2X2**

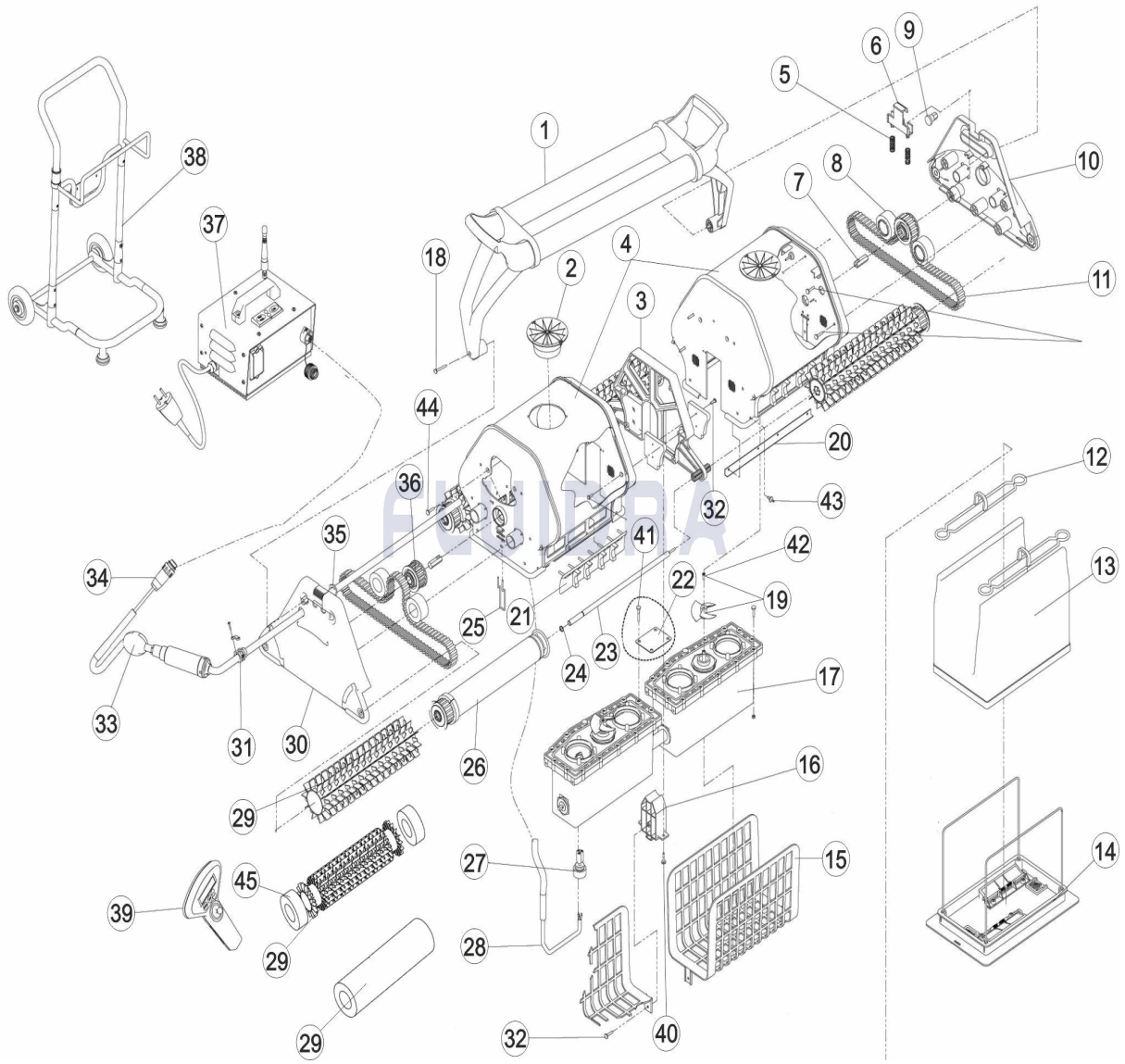

PORTUGUES

POS	CODIGO	DESCRICÃO	JANTIDADE	POS	CODIGO	DESCRICÃO	JANTIDADE
1	99957049-ASSY	ASA		13	99954304-ASSY	SACO FILTRANTE 15 UM, MOD. 2007	
2	9995070	PROTECÇÃO VENTILADOR 2001 (AMAREL		13	99954308-ASSY	(NOT DEFINED)	
3	9987602	DIVISÓRIAS CHASSIS 2X2		14	9995550	TAMPA DO SACO FILTRANTE COMPLETA D	
4	9995196	CHASSIS PARA DOLPHIN 2X2 (AZUL/PRET		15	6203703	REDE DE UNIDADE MOTORA	
5	3917031	MOLA DO FIXADOR DA ASA		16	9987601	CLIP LIGAÇÃO CAIXAS DE MOTORES 2X2	
6	9985070	FIXADOR DE ASA - 2X2		17	9995342RD-ASSY	(NOT DEFINED)	
7	3865005	EIXO DO ROLAMENTO DE TRACÇÃO		17	9995341RD-EX	CONJUNTO MOTOR 2X2 PARA VERSÕES P	
8	3884997	ROLAMENTO GUIA		18	3305030-A	PARAFUSO KA50X30	
9	9985065	SLIDE DA ASA		19	9995269	TURBINA COM PARAFUSO TOPO	
10	9981082	LATERAL 2X2 PÓS 2004		20	3870010	SUPORTE DE FLAPS P/ 2002 E 3002	
11	9985007	CORREIA " TIMING TRACK" AMAREL "		21	9985280	FLAP GRIS 2001/3001	
12	9981430	CLIP BOLSA FILTRO		22	9991000	(NOT DEFINED)	
13	9995431-ASSY	SACO FILTRANTE 150 UM (COARSE - APR		23	5581004	VEIO DE ROLO 2X2	

CODIGO **52660**

DESCRICÃO: **DOLPHIN 2X2**

13	9995430-ASSY	SACO FILTRANTE 50 MICRONS	24	3506799	ANEL ELÁSTICO DIA. 8 MM A2
13	9991440-ASSY	SACO FILTRANTE DESCARTÁVEL (KIT DE !	25	3965030	CLIP TAMPA FILTRO
26	99955954-ASSY	RODILHO DE ARRASTE 2X2 - MOD. PÓS 20	34	5000009	FICHA CABO FONTE ALIMENTAÇÃO
27	9991277	(NOT DEFINED)	35	Z3967136	(NOT DEFINED)
28	9995748LF-ASSY	CABO 40 M PARA 2X2 C/ SWIVEL	36	3883645	ROLAMENTO TRACÇÃO " T "
28	9995754LF-ASSY	CABO 45 M PARA 2X2 C/ SWIVEL	37	9995677-ASSY	FONTE DE ALIMENTAÇÃO 2X2 EUR 2011
28	9995792-ASSY	TROÇO DE 1.2 M DE CABO COM SWIVEL -	38	9996093	(NOT DEFINED)
29	6101603	ESCOVA PVC AZUL	39	9995438	COMANDO PARA DOLPHIN 2X2 - MOD. PÓS
29	6101660	(NOT DEFINED)	40	3379616-A	PARAFUSO WN 50X16
29	6101610	ESCOVA MÁGICA 2001, 3001, SUPERKLEEI	41	3104530	(NOT DEFINED)
30	9995059	(NOT DEFINED)	42	3101410-A	(NOT DEFINED)
31	3967135	FIXADOR DE CABO AUTOFLUTUANTE À TA	43	3000484	(NOT DEFINED)
32	3379720-A	(not defined)	44	3154414-A	(NOT DEFINED)
33	9995091	FLUTUADOR DE CABO 2X2	45	6101611	ANEL DE ESCOVA MÁGICA