KIT

REV: **0** **1657**
FECHA: **28/01/2022**
HOJA: **1/3**

CODIGO **61374FP226, 61375FP226, 61376FP226, 61377FP226**

DESCRIPCION: **FILTROS PRO-ADAPT AELLO**

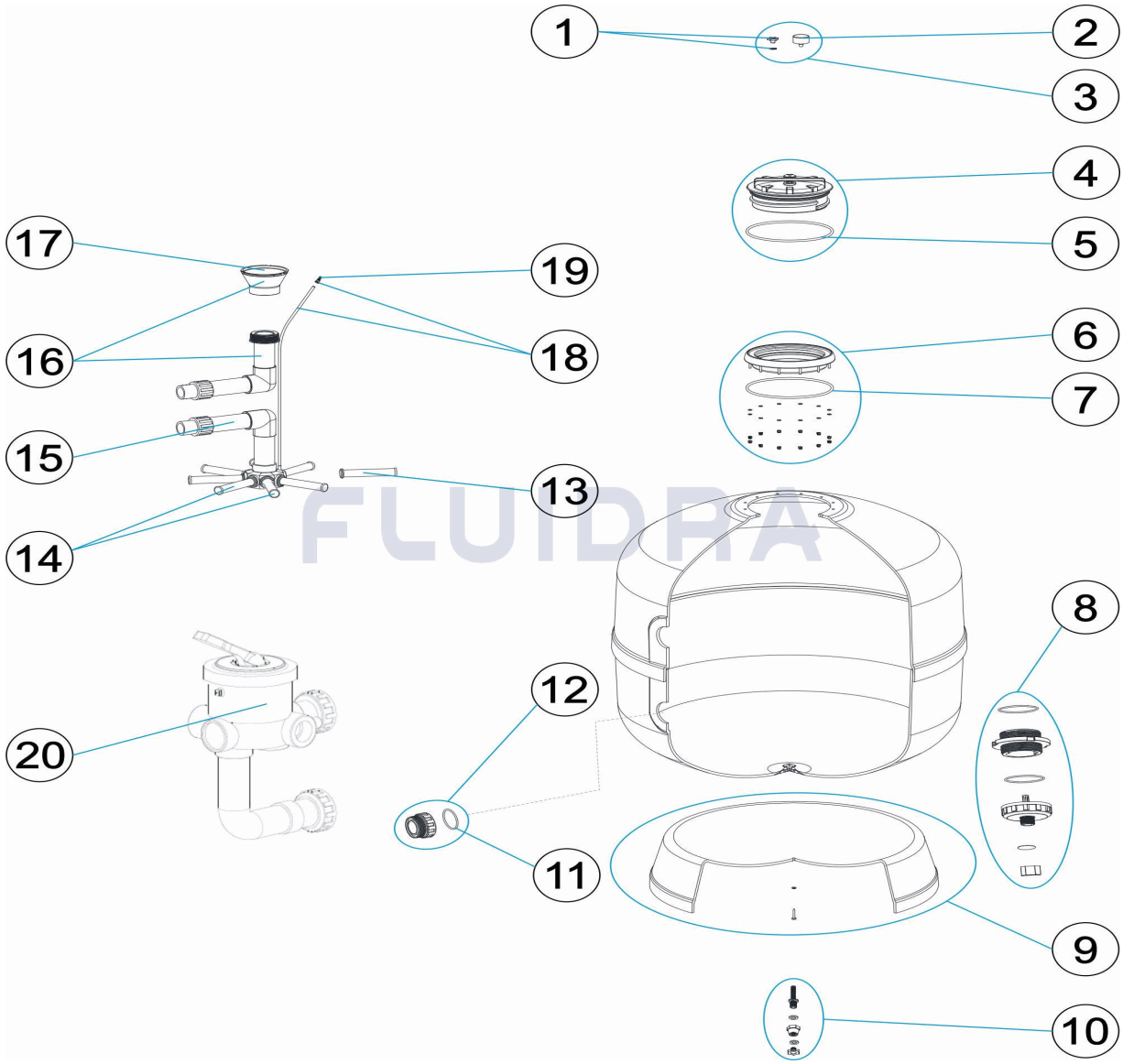

FLUIDRA

ESPAÑOL

POS	CODIGO	DESCRIPCION	CANTIDAD	POS	CODIGO	DESCRIPCION	CANTIDAD
1	4404040113	TAPON PURGA Y JUNTA		13	* 4404300917	BRAZO COLECTOR 1" 110 M "	
2	4404010103	MANOMETRO 1/8" 3 KG./C "		13	* 4404300915	BRAZO COLECTOR 1" 175 M "	
3	4404260203	CJTO. MANOMETRO 1/8"		13	* 4404300916	BRAZO COLECTOR 1" 225 M "	
4	4404260201	TAPA FILTRO		13	* 4404290109	BRAZO COLECTOR 1" 265 M "	
5	4404260202	JUNTA TAPA		14	* 4404010025	CJTO. BRAZOS COLECTOR D. 400	
6	4404260205	ARO TAPA COMPLETO		14	* 4404010026	CJTO. BRAZOS COLECTOR	
7	4404020116	JUNTA TORICA 255X4		14	* 4404010028	CJTO. BRAZOS COLECTOR D. 650	
8	4404020010	CJTO. PURGA AGUA 2 ½"		14	* 4404010048	CJTO. BRAZOS COLECTOR D. 750	
9	* 4404010134	PIE FILTRO		15	* 4404010428	CJTO. COLECTOR D. 500	
9	* 4404010113	PIE FILTRO D. 600		15	* 4404010429	CJTO. COLECTOR D. 600	
9	* 4404300924	PIE FILTRO D. 750		15	* 4404010430	CJTO. COLECTOR D. 750	
9	* 4404010240	PIE FILTRO D. 900		15	* 4404010431	CJTO. COLECTOR D. 900	
10	4404010108	PURGA AGUA 3/8"		16	* 4404010432	CJTO. DIFUSOR D. 500	

*** NOTA OBSERVACIONES**

KIT

REV: **0** **1657**
FECHA: **28/01/2022**
HOJA: **2/3**

CODIGO **61374FP226, 61375FP226, 61376FP226, 61377FP226**

DESCRIPCION: **FILTROS PRO-ADAPT AELLO**

11	4404040115	JUNTA TORICA D. 60X8	16	* 4404010433	CJTO. DIFUSOR D. 600
12	4404010427	RACORD SALIDA + JUNTA TORICA	16	* 4404010434	CJTO. DIFUSOR D. 750
16	* 4404010121	CJTO. DIFUSOR D. 900	18	* 4404300707	TUBO RIGIDO L-845
17	* 4404301004	CONO DIFUSOR D.50	19	4404040108	PURGA AIRE
17	* 4404300910	CONO DIFUSOR D. 63	20	* 61393	VALVULA SELECTORA 1 ½"
18	* 4404301003	PURGA AIRE + TUBO L=670	20	* 61394	VALVULA SELECTORA CON ENLACES 2"

*** NOTA OBSERVACIONES**

CODIGO **61374FP226, 61375FP226, 61376FP226, 61377FP226**

DESCRIPCION: **FILTROS PRO-ADAPT AELLO**

OBSERVACIONES

POS	CODIGO	OBSERVACIONES
9	* 4404010134	PARA: 61374FP226
9	* 4404010113	PARA: 61375FP226
9	* 4404300924	PARA: 61376FP226
9	* 4404010240	PARA: 61377FP226
13	* 4404300917	PARA: 61374FP226 [4UNIDADES]
13	* 4404300915	PARA: 61375FP226 [4UNIDADES]
13	* 4404300916	PARA: 61376FP226 [6UNIDADES]
13	* 4404290109	PARA: 61377FP226 [6UNIDADES]
14	* 4404010025	PARA: 61374FP226
14	* 4404010026	PARA: 61375FP226
14	* 4404010028	PARA: 61376FP226
14	* 4404010048	PARA: 61377FP226
15	* 4404010428	PARA: 61374FP226
15	* 4404010429	PARA: 61375FP226
15	* 4404010430	PARA: 61376FP226
15	* 4404010431	PARA: 61377FP226
16	* 4404010432	PARA: 61374FP226
16	* 4404010433	PARA: 61375FP226
16	* 4404010434	PARA: 61376FP226
16	* 4404010121	PARA: 61377FP226
17	* 4404301004	PARA: 61374FP226, 61375FP226
17	* 4404300910	PARA: 61376FP226, 61377FP226
18	* 4404301003	PARA: 61374FP226, 61375FP226
18	* 4404300707	PARA: 61376FP226, 61377FP226
20	* 61393	PARA: 61374FP226, 61375FP226
20	* 61394	PARA: 61376FP226, 61377FP226

ÉCLATÉ

REV.: **0** **1657**
DATE: **28/01/2022**
PAG.: **1/3**

CODE **61374FP226, 61375FP226, 61376FP226, 61377FP226**

DESCRIPTION: **FILTRES PRO-ADAPT AELLO**

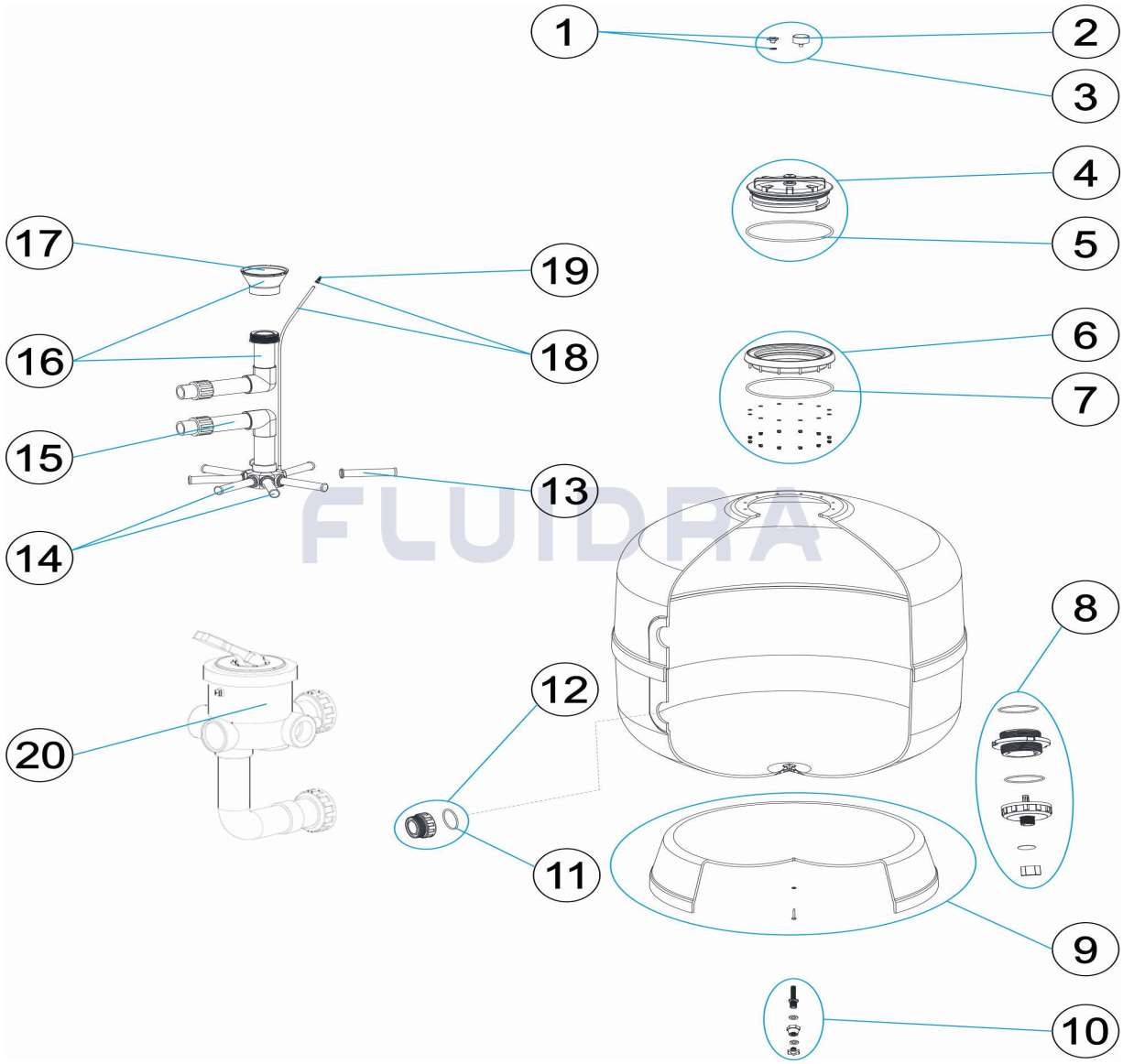

FLUIDRA

FRANCAIS

POS	CODE	DESCRIPTION QUANTITE	POS	CODE	DESCRIPTION QUANTITE
1	4404040113	BOUCHON PURGE ET JOINT	13	* 4404300917	BRAS DE REPARTITEUR 1" 110 M "
2	4404010103	MANOMETRE 1/8" 3 KG./C "	13	* 4404300915	BRAS DE REPARTITEUR 1" 175 M "
3	4404260203	ENSEMBLE DE MANOMETRE 1/8"	13	* 4404300916	BRAS DE REPARTITEUR 1" 225 M "
4	4404260201	COUVERCLE DE FILTRE	13	* 4404290109	BRAS DE REPARTITEUR 1" 265 M/M "
5	4404260202	JOINT DE COUVERCLE	14	* 4404010025	ENSEMBLE BRAS DE REPARTITEUR D. 400
6	4404260205	BRIDE DE COUVERCLE COMPLETE	14	* 4404010026	ENSEMBLE BRAS DE REPARTITEUR
7	4404020116	JOINT TORIQUE 255X4	14	* 4404010028	ENSEMBLE BRAS DE REPARTITEUR D. 650
8	4404020010	ENSEMBLE PURGE 2 1/2"	14	* 4404010048	ENSEMBLE BRAS DE REPARTITEUR D. 750
9	* 4404010134	SOCLE FILTRE	15	* 4404010428	ENSEMBLE COLLECTEUR D. 500
9	* 4404010113	SOCLE FILTRE D. 600	15	* 4404010429	ENSEMBLE COLLECTEUR D. 600
9	* 4404300924	SOCLE FILTRE D 750	15	* 4404010430	ENSEMBLE COLLECTEUR D. 750
9	* 4404010240	SOCLE FILTRE D. 900	15	* 4404010431	ENSEMBLE COLLECTEUR D. 900
10	4404010108	PURGE D'EAU 3/8"	16	* 4404010432	ENSEMBLE DIFFUSEUR D. 500

*** VOIR FICHE D'OBSERVATIONS**

ÉCLATÉ

CODE **61374FP226, 61375FP226, 61376FP226, 61377FP226**

DESCRIPTION: **FILTRES PRO-ADAPT AELLO**

11	4404040115	JOINT TORIQUE D 60X8	16	* 4404010433	ENSEMBLE DIFFUSEUR D. 600
12	4404010427	RACCORD SORTIE + JOINT TORIQUE	16	* 4404010434	ENSEMBLE DIFFUSEUR D. 750
16	* 4404010121	ENSEMBLE DIFFUSEUR D. 900	18	* 4404300707	TUBE RIGIDE L-845
17	* 4404301004	DIFUSOR CONIQUE SUPÉRIOR D. 50	19	4404040108	PURGE D'AIR
17	* 4404300910	DIFUSOR CONIQUE SUPÉRIOR D. 63	20	* 61393	SÉLECTEUR 1 1/2"
18	* 4404301003	PURGE AIR + TUBE L=670	20	* 61394	SÉLECTEUR AVEC LIENS 2"

*** VOIR FICHE D'OBSERVATIONS**

CODE **61374FP226, 61375FP226, 61376FP226, 61377FP226**

DESCRIPTION: **FILTRES PRO-ADAPT AELLO**

OBSERVATIONS

POS	CODE	OBSERVATIONS
9	* 4404010134	POUR: 61374FP226
9	* 4404010113	POUR: 61375FP226
9	* 4404300924	POUR: 61376FP226
9	* 4404010240	POUR: 61377FP226
13	* 4404300917	POUR: 61374FP226 [4UT]
13	* 4404300915	POUR: 61375FP226 [4UT]
13	* 4404300916	POUR: 61376FP226 [6UT]
13	* 4404290109	POUR: 61377FP226 [6UT]
14	* 4404010025	POUR: 61374FP226
14	* 4404010026	POUR: 61375FP226
14	* 4404010028	POUR: 61376FP226
14	* 4404010048	POUR: 61377FP226
15	* 4404010428	POUR: 61374FP226
15	* 4404010429	POUR: 61375FP226
15	* 4404010430	POUR: 61376FP226
15	* 4404010431	POUR: 61377FP226
16	* 4404010432	POUR: 61374FP226
16	* 4404010433	POUR: 61375FP226
16	* 4404010434	POUR: 61376FP226
16	* 4404010121	POUR: 61377FP226
17	* 4404301004	POUR: 61374FP226, 61375FP226
17	* 4404300910	POUR: 61376FP226, 61377FP226
18	* 4404301003	POUR: 61374FP226, 61375FP226
18	* 4404300707	POUR: 61376FP226, 61377FP226
20	* 61393	POUR: 61374FP226, 61375FP226
20	* 61394	POUR: 61376FP226, 61377FP226

PARTS BREAKDOWN

REV.: **0** **1657**
DATE: **28/01/2022**
SHEET: **1/3**

CODE **61374FP226, 61375FP226, 61376FP226, 61377FP226**

DESCRIPTION: **PRO-ADAPT AELLO FILTERS**

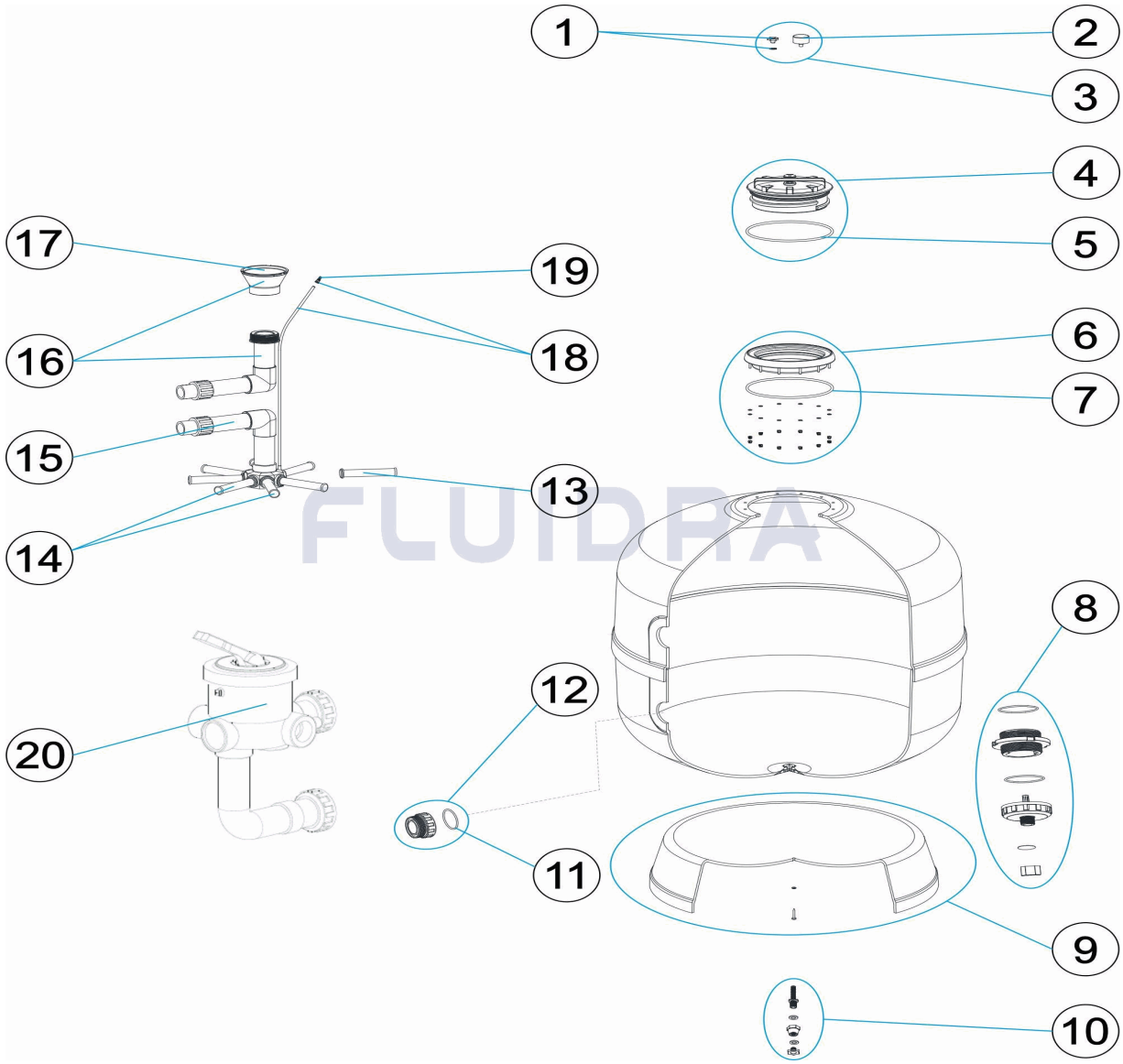

FLUIDRA

ENGLISH

POS	CODE	DESCRIPTION QUANTITY	POS	CODE	DESCRIPTION QUANTITY
1	4404040113	DRAIN PLUG AND GASKET	13	* 4404300917	MANIFOLD ARM 1" 110 M "
2	4404010103	PRESSURE GAUGE 1/8" 3 KG./C "	13	* 4404300915	MANIFOLD ARM 1" 175 M "
3	4404260203	PRESSURE GAUGE ASSEMBLY 1/8"	13	* 4404300916	MANIFOLD ARM 1" 225 M "
4	4404260201	FILTER LID	13	* 4404290109	COLLECTOR ARM 1" 265 M "
5	4404260202	LID GASKET	14	* 4404010025	MANIFOLD ARM ASSEMBLY D. 400
6	4404260205	LID RING UNIT	14	* 4404010026	MANIFOLD ARM ASSEMBLY
7	4404020116	O' RING 255X4	14	* 4404010028	MANIFOLD ARM ASSEMBLY D. 650
8	4404020010	2 1/2" DRAIN SE "	14	* 4404010048	MANIFOLD ARM ASSEMBLY D. 750
9	* 4404010134	FILTER BASE	15	* 4404010428	MANIFOLD ASSEMBLY D. 500
9	* 4404010113	FILTER BASE D. 600	15	* 4404010429	MANIFOLD ASSEMBLY D. 600
9	* 4404300924	FILTER BASE D. 750	15	* 4404010430	MANIFOLD ASSEMBLY D. 750
9	* 4404010240	FILTER BASE D. 900	15	* 4404010431	MANIFOLD ASSEMBLY D. 900
10	4404010108	WATER PURGE 3/8"	16	* 4404010432	DIFFUSER ASSEMBLY D. 500

*** SEE OBSERVATIONS SHEET**

PARTS BREAKDOWN

REV.: **0** **1657**
DATE: **28/01/2022**
SHEET: **2/3**

CODE **61374FP226, 61375FP226, 61376FP226, 61377FP226**

DESCRIPTION: **PRO-ADAPT AELLO FILTERS**

11	4404040115	O' RING D. 60X8	16	* 4404010433	DIFFUSER ASSEMBLY D. 600
12	4404010427	OUTLET FITTING + O'RING	16	* 4404010434	DIFFUSER ASSEMBLY D. 750
16	* 4404010121	DIFFUSER ASSEMBLY D. 900	18	* 4404300707	RIGID PIPE L-845
17	* 4404301004	DIFFUSER CONE D. 50	19	4404040108	AIR PURGE
17	* 4404300910	DIFFUSER CONE D. 63	20	* 61393	MULTIPORT VALVE 1 1/2"
18	* 4404301003	AIR PURGE + PIPE L=670	20	* 61394	SELECTOR VALVE WITH LINKS 2"

*** SEE OBSERVATIONS SHEET**

CODE **61374FP226, 61375FP226, 61376FP226, 61377FP226**

DESCRIPTION: **PRO-ADAPT AELLO FILTERS**

OBSERVATIONS

POS	CODE	OBSERVATIONS
9	* 4404010134	FOR: 61374FP226
9	* 4404010113	FOR: 61375FP226
9	* 4404300924	FOR: 61376FP226
9	* 4404010240	FOR: 61377FP226
13	* 4404300917	FOR: 61374FP226 [4UT]
13	* 4404300915	FOR: 61375FP226 [4UT]
13	* 4404300916	FOR: 61376FP226 [6UT]
13	* 4404290109	FOR: 61377FP226 [6UT]
14	* 4404010025	FOR: 61374FP226
14	* 4404010026	FOR: 61375FP226
14	* 4404010028	FOR: 61376FP226
14	* 4404010048	FOR: 61377FP226
15	* 4404010428	FOR: 61374FP226
15	* 4404010429	FOR: 61375FP226
15	* 4404010430	FOR: 61376FP226
15	* 4404010431	FOR: 61377FP226
16	* 4404010432	FOR: 61374FP226
16	* 4404010433	FOR: 61375FP226
16	* 4404010434	FOR: 61376FP226
16	* 4404010121	FOR: 61377FP226
17	* 4404301004	FOR: 61374FP226, 61375FP226
17	* 4404300910	FOR: 61376FP226, 61377FP226
18	* 4404301003	FOR: 61374FP226, 61375FP226
18	* 4404300707	FOR: 61376FP226, 61377FP226
20	* 61393	FOR: 61374FP226, 61375FP226
20	* 61394	FOR: 61376FP226, 61377FP226

ESPLOSO

REV.: **0** **1657**
DATA: **28/01/2022**
PAG.: **1/3**

CODICE **61374FP226, 61375FP226, 61376FP226, 61377FP226**

DESCRIZIONE: **FILTRI PRO-ADAPT AELLO**

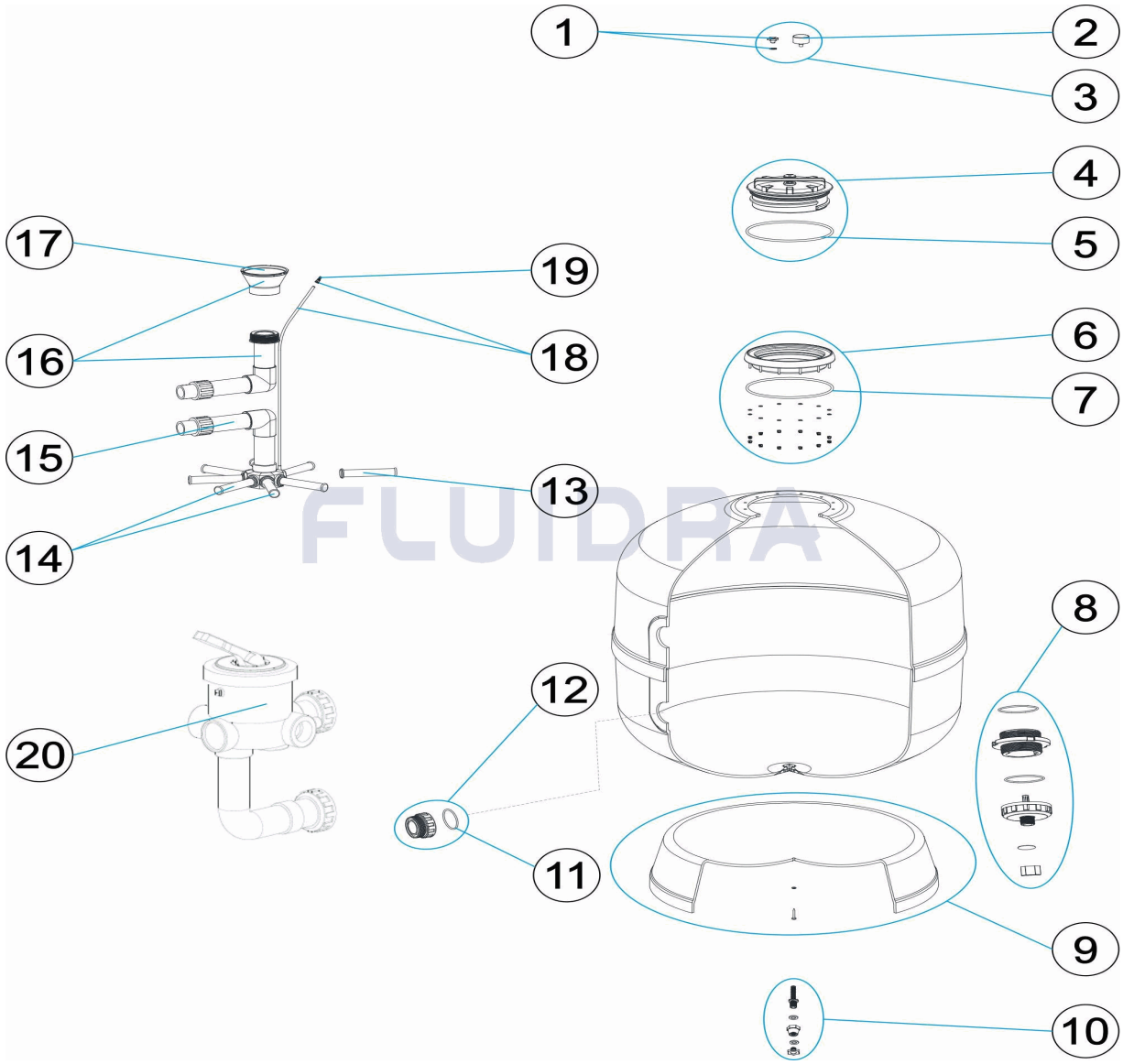

FLUIDRA

ITALIANO

POS	CODICE	DESCRIZIONE QUANTITA'	POS	CODICE	DESCRIZIONE QUANTITA'
1	4404040113	TAPPO SPURGO E GUARNIZIONE	13	* 4404300917	CANDELOTTO COLLECTORE 1" 110 M "
2	4404010103	MANOMETRO 1/8" 3 KG./C "	13	* 4404300915	CANDELOTTO COLLECTORE 1" 175 M "
3	4404260203	KIT MANOMETRO 1/8"	13	* 4404300916	CANDELOTTO COLLECTORE 1" 225 M "
4	4404260201	COPERCHIO FILTRO	13	* 4404290109	CANDELOTTO 1" 265 M/M "
5	4404260202	GUARNIZIONE COPERCHIO	14	* 4404010025	GRUPPO CANDELOTTO COLLECTORE D. 4
6	4404260205	FLANGIA COPERCHIO COMPLETO	14	* 4404010026	GRUPPO CANDELOTTO COLLECTORE
7	4404020116	O-RING 255X4	14	* 4404010028	GRUPPO CANDELOTTO COLLECTORE D. 6
8	4404020010	KIT SCARICO 2 1/2"	14	* 4404010048	GRUPPO CANDELOTTO COLLECTORE D. 7
9	* 4404010134	BASE FILTRO	15	* 4404010428	KIT COLLETTORE D. 500
9	* 4404010113	BASE FILTRO D.600	15	* 4404010429	KIT COLLETTORE D. 600
9	* 4404300924	BASE FILTRO D 750	15	* 4404010430	KIT COLLETTORE D. 750
9	* 4404010240	BASE FILTRO D. 900	15	* 4404010431	KIT COLLETTORE D. 900
10	4404010108	SCARICO ACQUA 3/8"	16	* 4404010432	RACCORDO DIFFUSORE D. 500

*** SI FACCIA RIFERIMENTO AL FOGLIO DELLE OSSERVAZIONI**

CODICE **61374FP226, 61375FP226, 61376FP226, 61377FP226**

DESCRIZIONE: **FILTRI PRO-ADAPT AELLO**

11	4404040115	O-RING D 60X8	16	* 4404010433	RACCORDO DIFFUSORE D. 600
12	4404010427	RACCORDO USCITA + O-RING	16	* 4404010434	RACCORDO DIFFUSORE D. 750
16	* 4404010121	RACCORDO DIFFUSORE D. 900	18	* 4404300707	TUBO RIGIDO L-845
17	* 4404301004	CONO DIFFUSORE D. 50	19	4404040108	SFIATO ARIA
17	* 4404300910	CONO DIFFUSORE D. 63	20	* 61393	VALVOLA SELETTRICE 1 1/2"
18	* 4404301003	SPURGO ARIA + TUBO L=670	20	* 61394	VALVOLA SELETTRICE CON COLLEGAMEN

*** SI FACCIA RIFERIMENTO AL FOGLIO DELLE OSSERVAZIONI**

CODICE **61374FP226, 61375FP226, 61376FP226, 61377FP226**

DESCRIZIONE: **FILTRI PRO-ADAPT AELLO**

OSSERVAZIONI

POS	CODICE	OSSERVAZIONI
9	* 4404010134	PER: 61374FP226
9	* 4404010113	PER: 61375FP226
9	* 4404300924	PER: 61376FP226
9	* 4404010240	PER: 61377FP226
13	* 4404300917	PER: 61374FP226 [4UT]
13	* 4404300915	PER: 61375FP226 [4UT]
13	* 4404300916	PER: 61376FP226 [6UT]
13	* 4404290109	PER: 61377FP226 [6UT]
14	* 4404010025	PER: 61374FP226
14	* 4404010026	PER: 61375FP226
14	* 4404010028	PER: 61376FP226
14	* 4404010048	PER: 61377FP226
15	* 4404010428	PER: 61374FP226
15	* 4404010429	PER: 61375FP226
15	* 4404010430	PER: 61376FP226
15	* 4404010431	PER: 61377FP226
16	* 4404010432	PER: 61374FP226
16	* 4404010433	PER: 61375FP226
16	* 4404010434	PER: 61376FP226
16	* 4404010121	PER: 61377FP226
17	* 4404301004	PER: 61374FP226, 61375FP226
17	* 4404300910	PER: 61376FP226, 61377FP226
18	* 4404301003	PER: 61374FP226, 61375FP226
18	* 4404300707	PER: 61376FP226, 61377FP226
20	* 61393	PER: 61374FP226, 61375FP226
20	* 61394	PER: 61376FP226, 61377FP226

EINZELTEILE

ÜBER.: **0** **1657**
DATUM: **28/01/2022**
BLATT: **1/3**

CODE **61374FP226, 61375FP226, 61376FP226, 61377FP226**

BESCHREIBURG: **FILTER PRO-ADAPT AELLO**

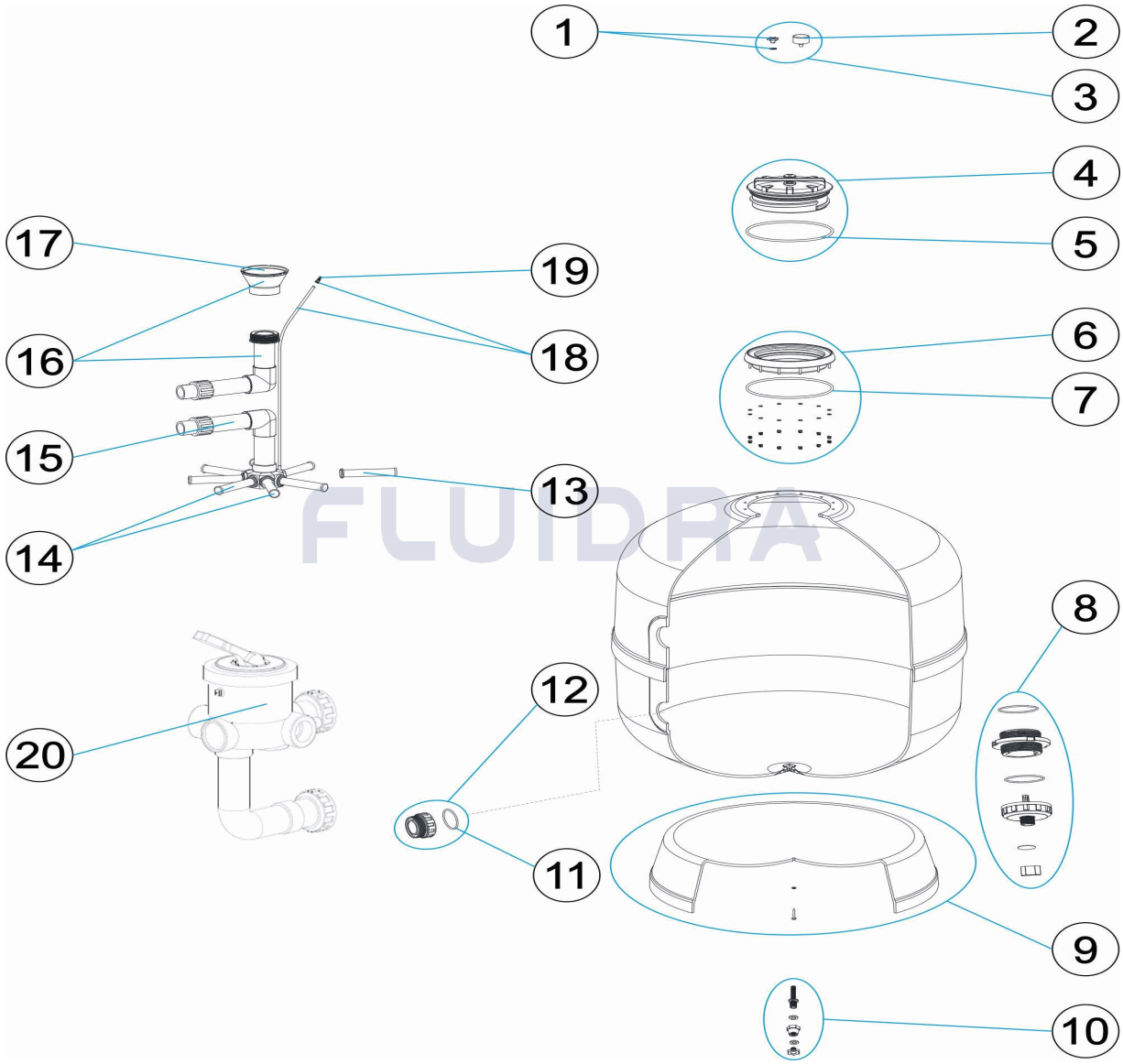

FLUIDRA

DEUTSCH

POS	CODE	BESCHREIBURG	MENGE	POS	CODE	BESCHREIBURG	MENGE
1	4404040113	ABLASSSTOPFEN UND DICHTUNG		13	* 4404300917	FILTERSTERN-SCHLITZROHR 1" 110 M "	
2	4404010103	MANOMETER 1/8" 3 KG/C "		13	* 4404300915	FILTERSTERN-SCHLITZROHR 1" 175 M "	
3	4404260203	SET MANOMETER 1/8"		13	* 4404300916	FILTERSTERN-SCHLITZROHR 1" 225 M "	
4	4404260201	FILTERDECKEL		13	* 4404290109	FILTERSTERN-SCHLITZROHR 1" 265 M "	
5	4404260202	DICHTUNG ABDECKUNG		14	* 4404010025	SET FILTERSTERN-SCHLITZROHR D. 400	
6	4404260205	RING ABDECKUNG KOMPLETT		14	* 4404010026	SET FILTERSTERN-SCHLITZROHR	
7	4404020116	O-RING 255 X 4		14	* 4404010028	SET FILTERSTERN-SCHLITZROHR D. 650	
8	4404020010	SET WASSERABLASS 2 1/2"		14	* 4404010048	SET FILTERSTERN-SCHLITZROHR D. 750	
9	* 4404010134	FILTERFUSS		15	* 4404010428	SAMMELROHRSET D. 500	
9	* 4404010113	FILTERFUSS D. 600		15	* 4404010429	SAMMELROHRSET D. 600	
9	* 4404300924	FILTERFUSS D. 750		15	* 4404010430	SAMMELROHRSET D. 750	
9	* 4404010240	FILTERFUSS D. 900		15	* 4404010431	SAMMELROHRSET D. 900	
10	4404010108	WASSERABLASS 3/8"		16	* 4404010432	SET WASSERVERTEILER D. 500	

*** SIEHE ANMERKUGSBLATT**

EINZELTEILE

CODE **61374FP226, 61375FP226, 61376FP226, 61377FP226**

BESCHREIBURG: **FILTER PRO-ADAPT AELLO**

11	4404040115	O-RING D. 60 X 8	16	* 4404010433	SET WASSERVERTEILER D. 600
12	4404010427	GEWINDESTÜCK AUSGANG UND O-RING	16	* 4404010434	SET WASSERVERTEILER D. 750
16	* 4404010121	SET WASSERVERTEILER D. 900	18	* 4404300707	ROHR HART L - 845
17	* 4404301004	KEGEL WASSERVERTEILER D. 50	19	4404040108	ENTLÜFTUNG
17	* 4404300910	KEGEL WASSERVERTEILER D. 63	20	* 61393	MEHRWEGVENTIL 1 1/2"
18	* 4404301003	ENTLÜFTUNG UND ROHR L=670	20	* 61394	MEHRWEGVENTIL MIT ANSCHLÜSSEN 2"

*** SIEHE ANMERKUGSBLATT**

CODE **61374FP226, 61375FP226, 61376FP226, 61377FP226**

BESCHREIBURG: **FILTER PRO-ADAPT AELLO**

HINWEISE

POS	CODE	HINWEISE
9	* 4404010134	FÜR: 61374FP226
9	* 4404010113	FÜR: 61375FP226
9	* 4404300924	FÜR: 61376FP226
9	* 4404010240	FÜR: 61377FP226
13	* 4404300917	FÜR: 61374FP226 [4UT]
13	* 4404300915	FÜR: 61375FP226 [4UT]
13	* 4404300916	FÜR: 61376FP226 [6UT]
13	* 4404290109	FÜR: 61377FP226 [6UT]
14	* 4404010025	FÜR: 61374FP226
14	* 4404010026	FÜR: 61375FP226
14	* 4404010028	FÜR: 61376FP226
14	* 4404010048	FÜR: 61377FP226
15	* 4404010428	FÜR: 61374FP226
15	* 4404010429	FÜR: 61375FP226
15	* 4404010430	FÜR: 61376FP226
15	* 4404010431	FÜR: 61377FP226
16	* 4404010432	FÜR: 61374FP226
16	* 4404010433	FÜR: 61375FP226
16	* 4404010434	FÜR: 61376FP226
16	* 4404010121	FÜR: 61377FP226
17	* 4404301004	FÜR: 61374FP226, 61375FP226
17	* 4404300910	FÜR: 61376FP226, 61377FP226
18	* 4404301003	FÜR: 61374FP226, 61375FP226
18	* 4404300707	FÜR: 61376FP226, 61377FP226
20	* 61393	FÜR: 61374FP226, 61375FP226
20	* 61394	FÜR: 61376FP226, 61377FP226

	ITEM	REV.: **0** 1657 DATA: **28/01/2022** FOLHA: **1/3**

CODIGO **61374FP226, 61375FP226, 61376FP226, 61377FP226**

DESCRICÃO: **FILTROS PRO-ADAPT AELLO**

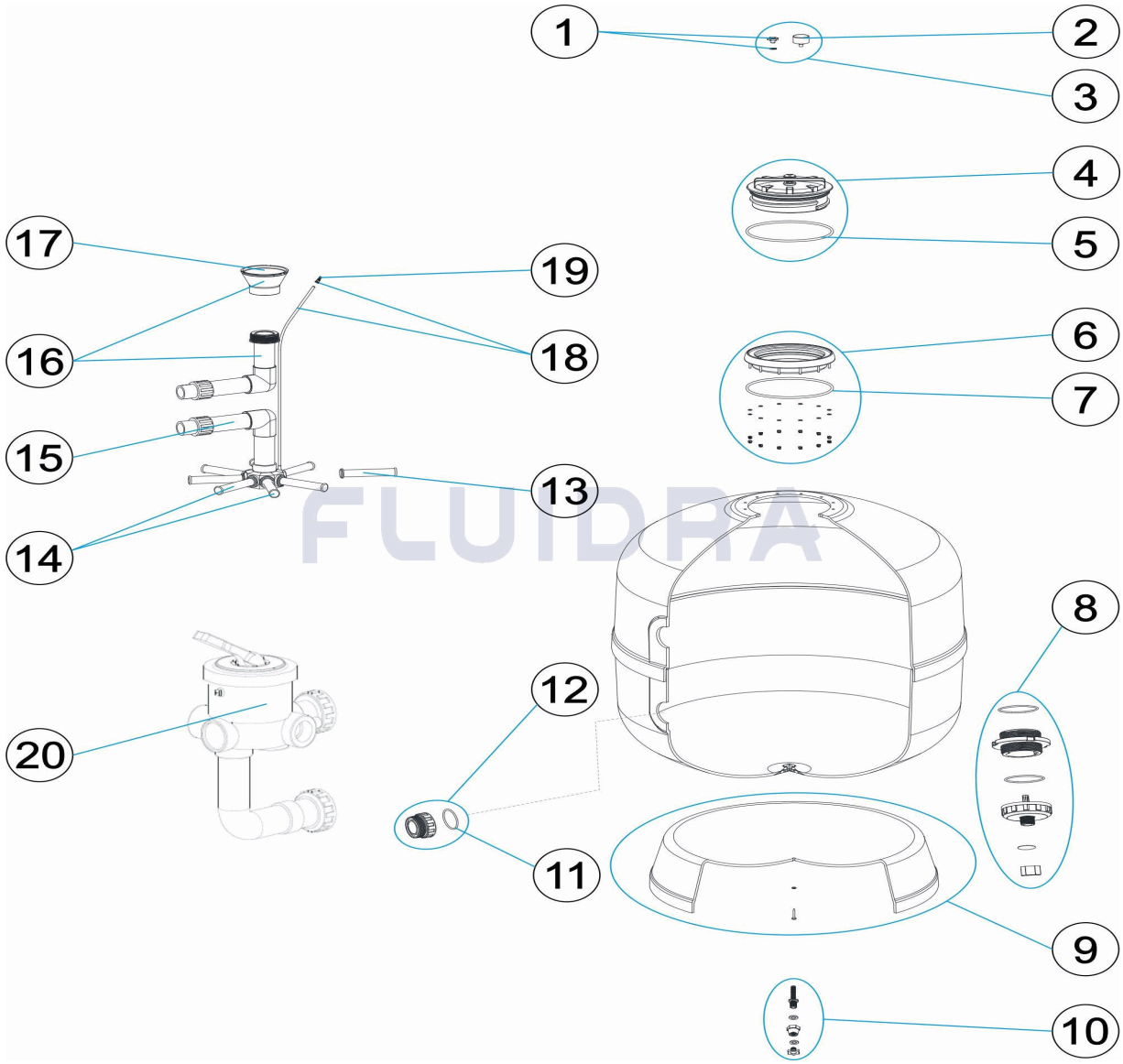

FLUIDRA

PORTUGUES

POS	CODIGO	DESCRICÃO	JANTIDADE	POS	CODIGO	DESCRICÃO	JANTIDADE
1	4404040113	TAMPÃO PURGA E JUNTA		13	* 4404300917	BRAÇO COLECTOR 1" 110 M "	
2	4404010103	MANOMETRO 1/8" 3 KG./C "		13	* 4404300915	BRAÇO COLECTOR 1" 175 M "	
3	4404260203	CONJUNTO MANOMETRO 1/8"		13	* 4404300916	BRAÇO COLECTOR 1" 225 M "	
4	4404260201	TAMPA FILTRO		13	* 4404290109	BRAÇO COLECTOR 1" 265 M/M "	
5	4404260202	JUNTA TAMPA		14	* 4404010025	CJTO. BRAÇO COLECTOR D. 400	
6	4404260205	ARO TAMPA COMPLETO		14	* 4404010026	CJTO. BRAÇO COLECTOR	
7	4404020116	JUNTA TÓRICA 255X4		14	* 4404010028	CJTO. BRAÇO COLECTOR D.650	
8	4404020010	CONJUNTO PURDA AREIA 2 1/2"		14	* 4404010048	CJTO. BRAÇO COLECTOR D. 750	
9	* 4404010134	PÉ FILTRO		15	* 4404010428	CJTO. COLECTOR D. 500	
9	* 4404010113	PÉ FILTRO D. 600		15	* 4404010429	CJTO. COLECTOR D. 600	
9	* 4404300924	PÉ FILTRO D 750		15	* 4404010430	CJTO. COLECTOR D. 750	
9	* 4404010240	PÉ FILTRO D. 900		15	* 4404010431	CJTO. COLECTOR D. 900	
10	4404010108	PURGA AGUA 3/8"		16	* 4404010432	CJTO. DIFUSOR D. 500	

*** VEJA A FICHA DE OBSERVACÕES**

CODIGO **61374FP226, 61375FP226, 61376FP226, 61377FP226**

DESCRICÃO: **FILTROS PRO-ADAPT AELLO**

11	4404040115	JUNTA TÓRICA D 60X8	16	* 4404010433	CJTO. DIFUSOR D. 600
12	4404010427	ACOPLADOR SAÍDA + JUNTA TORICA	16	* 4404010434	CJTO. DIFUSOR D. 750
16	* 4404010121	CJTO. DIFUSOR D. 900	18	* 4404300707	TUBO RÍGIDO L-845
17	* 4404301004	CONO DIFUSOR D. 50	19	4404040108	PURGA AREIA
17	* 4404300910	CONO DIFUSOR D. 63	20	* 61393	VÁLVULA SELECTORA 1 1/2"
18	* 4404301003	PURGA AR + TUBO L=670	20	* 61394	VÁLVULA SELECTORA COM LIGAÇÕES 2"

*** VEJA A FICHA DE OBSERVACÕES**

CODIGO **61374FP226, 61375FP226, 61376FP226, 61377FP226**

DESCRICÃO: **FILTROS PRO-ADAPT AELLO**

OBSERVACÕES

POS	CODIGO	OBSERVACÕES
9	* 4404010134	PARA: 61374FP226
9	* 4404010113	PARA: 61375FP226
9	* 4404300924	PARA: 61376FP226
9	* 4404010240	PARA: 61377FP226
13	* 4404300917	PARA: 61374FP226 [4UT]
13	* 4404300915	PARA: 61375FP226 [4UT]
13	* 4404300916	PARA: 61376FP226 [6UT]
13	* 4404290109	PARA: 61377FP226 [6UT]
14	* 4404010025	PARA: 61374FP226
14	* 4404010026	PARA: 61375FP226
14	* 4404010028	PARA: 61376FP226
14	* 4404010048	PARA: 61377FP226
15	* 4404010428	PARA: 61374FP226
15	* 4404010429	PARA: 61375FP226
15	* 4404010430	PARA: 61376FP226
15	* 4404010431	PARA: 61377FP226
16	* 4404010432	PARA: 61374FP226
16	* 4404010433	PARA: 61375FP226
16	* 4404010434	PARA: 61376FP226
16	* 4404010121	PARA: 61377FP226
17	* 4404301004	PARA: 61374FP226, 61375FP226
17	* 4404300910	PARA: 61376FP226, 61377FP226
18	* 4404301003	PARA: 61374FP226, 61375FP226
18	* 4404300707	PARA: 61376FP226, 61377FP226
20	* 61393	PARA: 61374FP226, 61375FP226
20	* 61394	PARA: 61376FP226, 61377FP226