ASTRALPOOL	DESPIECE	REV: **1** FECHA: **28/05/2021** HOJA: **1/12**	**837**

CODIGO **34206**

DESCRIPCION: **DOLPHIN ULTRA KLEEN BATTERY**

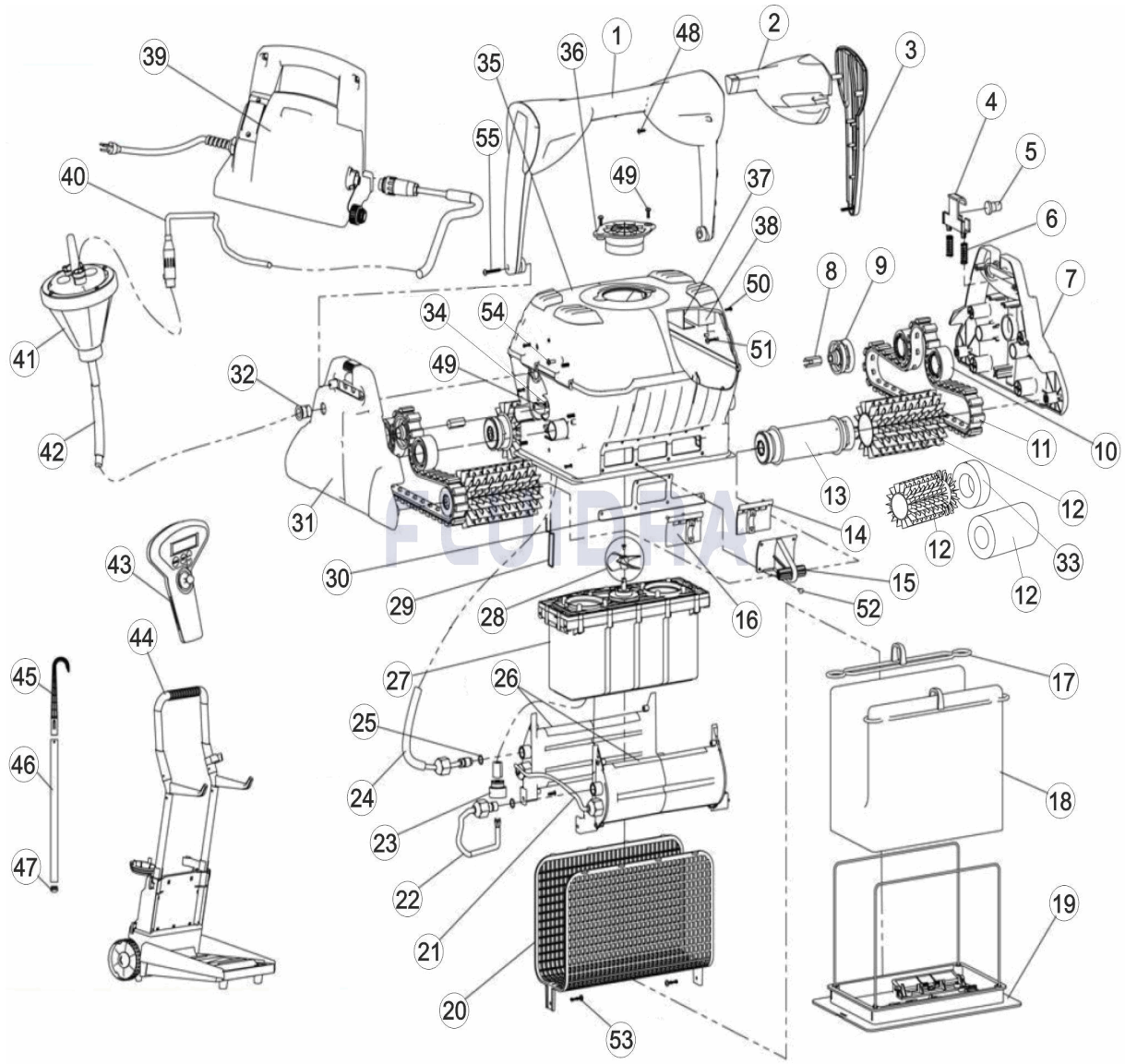

ESPAÑOL

POS	CODIGO	DESCRIPCION	CANTIDAD	POS	CODIGO	DESCRIPCION	CANTIDAD
1	9995717	ASA PARA TIBERIUS		14	9985283	CLAPETA ANTIRETORNO GRIS IZQUIERDO	
2	6250922	FLOTADOR PARA MANGO DOLPHIN 2		15	9980110	SOPORTE RODILLOS	
3	9981060	TAPA LADO PARA MANGO DOLPHIN 2		16	9985285	CLAPETA ANTIRETORNO GRIS DERECHO	
4	9985064	SOPORTE MANGO GRIS O. C/POSICION		17	9981430	CLIP BOLSA FILTRO DOLPHIN	
5	9985065	TAPON MANGO		18	9995431-ASSY	BOLSA FILTRO 150 MICRAS	
6	3917031	MUELLE SOPORTE MANGO DOLPHIN		18	9995430-ASSY	BOLSA DOLPHIN 50 MICRAS	
7	9981020	TAPA LADO PARA DOLPHIN 2 ROYAL AZUL		18	9991440-ASSY	PACK 5 BOLSAS DESECHABLES PARA FILT	
8	3865005	ADAPTADOR HEXAGONAL POLEA NUEVA		18	99954304-ASSY	BOLSA FILTRO 50 MICRAS C/AGUJEROS	
9	3884076	POLEA NUEVA PARA EJE PLANO		18	99954308-ASSY	BOLSA FILTRO 70 MICRAS	
10	3884997	RUEDA GUIA DOLPHIN		19	9995550	TAPA COMPLETA AÑO 2005	
11	Z9985052	CORREA DE TRACCION		20	6203703	REJILLA PREFILTRO DOLPHIN	
12	6101624	CEPILLO LIMPIADOR PVC NARANJA		21	9995960-ASSY	CABLE ENTRE BATERIAS IZQ&DER	
12	6101647	CEPILLO DYNAMIC C.B. LIMPIADOR PVC N		22	9995963-ASSY	CABLE FLOTADOR PARA DOLPHIN	

CODIGO **34206**

DESCRIPCION: **DOLPHIN ULTRA KLEEN BATTERY**

12	9995560-ASSY	CEPILLO PARA LIMPIAFONDO " MAGIC" D'	23	9991279	CONJUNTO CONEXION CABLE PARA DYNA
13	9993197	KIT TRACCION DYN GRIS	24	9995790-ASSY	CABLE FLOTADOR 2,5 MTS PB
24	9995794-ASSY	CABLE FLOTADOR PARA 3,5 MTS PB	39	9995640-ASSY	CARGADOR 230 V PB
24	9995798-ASSY	CABLE FLOTADOR PARA 4,5 MTS PB	40	9995959	CABLE DEL CARGADOR AL FLOTADOR PB
25	3862013	JUNTA 2-013 PB	41	9991231	CJTO. FLOTADOR BATERIA
26	9991228-ASSY	CONJUNTO BATERIA PB	42	9991753	FUNDA TERMOCONT. 18 X 6 AZUL
27	9995350LF-ASSY	MOTOR DIAGNOSTIC PLUS BATERIA	43	9995411	CONTROL REMOTO PARA KLEEN BATTERY
27	9995351LF-EX	MOTOR DIAGNOSTIC PLUS BATERIA EX	44	9996104	CARRO DOLPHIN PB
28	9995269	ELICE IMPULSION+TORNILLO DC	45	9980101	ASA PARA RECOGER DOLPHIN PB
29	3965030	PASADOR CARCASA DOLPHIN	46	7300305	TUBO ALUMINIO CARRO
30	4197011	ANTIRETORNO	47	3390514	CORCHO PARA ASA PB
31	9995050	CONJ. LADO PANEL + FUNDA DOLPHIN 2	48	3379450-A	TORNILLO KA40X12
32	9981165	PRENSAESTOPAS CABLE	49	3379440-A	TORNILLO KA 50X12 A2
33	6101611	ARO CEPILLO MAGIC PARA CB	50	3350213	TORNILLO DIN- 7982 2,9X13
34	2151208	BRIDA FIJACION FLOTADOR	51	3379616-A	TORNILLO KA 50X16
35	99951702	CARCASA ULTRS KLEEN BSTERIS	52	3000484	TORNILLO M4X15
36	9981040	TAPA TURBINA	53	3379720-A	TORNILLO K50X20
37	9985141	SOPORTE FLOTADOR LATERAL	54	3154414-A	TORNILLO M-4X14 DIN-7985
38	6250912	FLOTADOR SUPERIOR (PARA TODOS MOD	55	3305030-A	TORNILLO KA 50X30

CODE **34206**

DESCRIPTION: **DOLPHIN ULTRA KLEEN BATTERY**

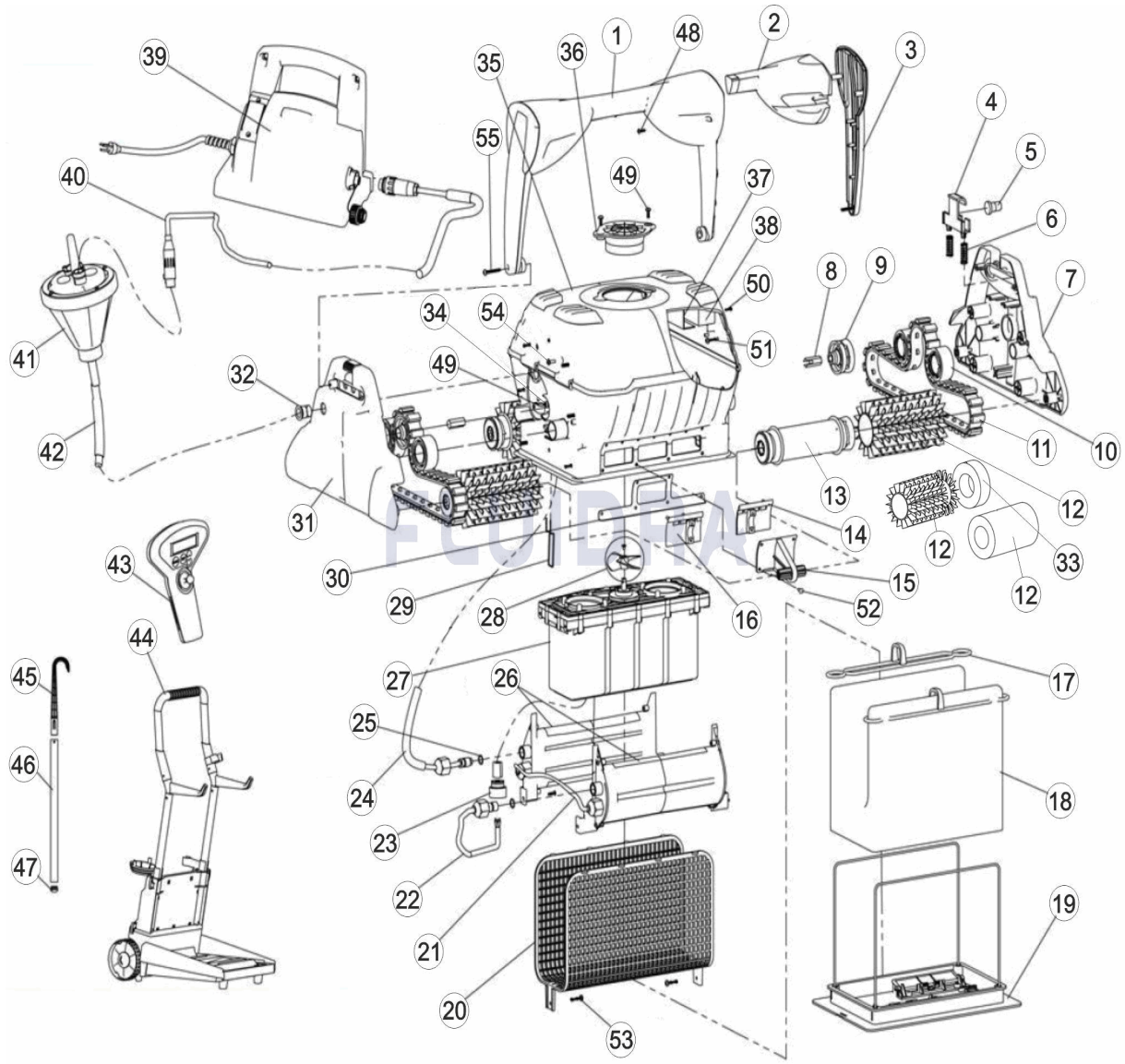

FRANCAIS

POS	CODE	DESCRIPTION QUANTITE	POS	CODE	DESCRIPTION QUANTITE
1	9995717	POIGNEE TIBERIUS	14	9985283	CLAPET ANTI RETOUR GAUCHE GRIS
2	6250922	FLOTTEUR POIGNEE	15	9980110	SUPPORT D'AXE DOLPHIN -9980110
3	9981060	FLASQUE LATERALE	16	9985285	CLAPET ANTI RETOUR DROIT GRIS
4	9985064	BLOQUE POIGNEE SUPERKLEEN	17	9981430	CLIP SAC FILTRANT DOLPHIN
5	9985065	CALE FIXATION/POIGNEE 9985065	18	9995431-ASSY	SAC FILTRANT 150 MICRONS
6	3917031	RESSORT POIGNEE DOLPHIN	18	9995430-ASSY	SAC DOLPHIN 50 MICRONS
7	9981020	FLASQUE LATERALE	18	9991440-ASSY	PAQUET 5 SACS FILTRANT JETABLE
8	3865005	ADAPTATEUR ROUE HEXAGONALE - 3865(	18	99954304-ASSY	SAC SUPERKLEEN PERFORE
9	3884076	ROUE ENTRAINEMENT	18	99954308-ASSY	SAC FILTRANT 70 MICRONS
10	3884997	ROUE GUIDE DOLPHIN	19	9995550	PORTE SAC DOLPHIN COMPLET
11	Z9985052	COURROIE DE TRACTION GRISE	20	6203703	GRILLE PROTECTION SAC
12	6101624	BROSSE PVC ORANGE	21	9995960-ASSY	CABLE CONNEXION BATTERIES
12	6101647	1/2 BROSSE PVC ORANGE PREDECOUPE	22	9995963-ASSY	CABLE CONNEXION MOTEUR SUPERKLEE

CODE **34206**

DESCRIPTION: **DOLPHIN ULTRA KLEEN BATTERY**

12	9995560-ASSY	WONDER BRUSH DYNAMIC	23	9991279	KIT PRISE PE DE DOLPHIN 9991279
13	9993197	(NOT DEFINED)	24	9995790-ASSY	CABLE FLOTTANT 2,5M
24	9995794-ASSY	CABLE FLOTTANT 3,5M	39	9995640-ASSY	CHARGEUR DOLPHIN SUPERKLEEN
24	9995798-ASSY	CABLE FLOTTANT 4,5M	40	9995959	CORDON DE CHARGE
25	3862013	JOINT 2-013 PB	41	9991231	FLOTTEUR COMMUNICATION ULTRAKLEEN
26	9991228-ASSY	BATTERIE ULTRAKLEEN	42	9991753	EMBOUT CABLE DOLPHIN - 9991753
27	9995350LF-ASSY	BLOC MOTEUR PLUS/ULTRAKLEEN BATTE	43	9995411	TELECOMMANDE ULTRAKLEEN BATTERY
27	9995351LF-EX	BLOC MOTEUR PLUS/ULTRAKLEEN BATTE	44	9996104	CHARIOT DOLPHIN
28	9995269	TURBINE DOLPHIN	45	9980101	POIGNEE RECUPERATION
29	3965030	CLIP VERROUILLAGE CARCASSE	46	7300305	TUBE ALUMINIUM BLANC DOLPHIN
30	4197011	RENFORT CARCASSE ULTRAKLEEN	47	3390514	FLOTTEUR POIGNEE
31	9995050	FLASQUE LATERALE COUVRANTE	48	3379450-A	VIS KA40X12
32	9981165	BAGUE GUIDE CABLE	49	3379440-A	VIS KA 50X12 EASYKLEEN
33	6101611	ANNEAU WONDER BRUSH	50	3350213	VIS DIN- 7982 2,9X13
34	2151208	BRIDE FIXATION FLOTTEUR	51	3379616-A	VIS KA50X16
35	99951702	CARCASSE ULTRAKLEEN BATTERY	52	3000484	VIS M4X15
36	9981040	CACHE TURBINE	53	3379720-A	VIS K50X20
37	9985141	SUPPORT FLOTTEUR LATERAL	54	3154414-A	VIS M-4X14 DIN-7985
38	6250912	FLOTTEUR SUPERIEUR	55	3305030-A	VIS KA50X30 EASYKLEEN

CODE **34206**

DESCRIPTION: **DOLPHIN ULTRA KLEEN BATTERY**

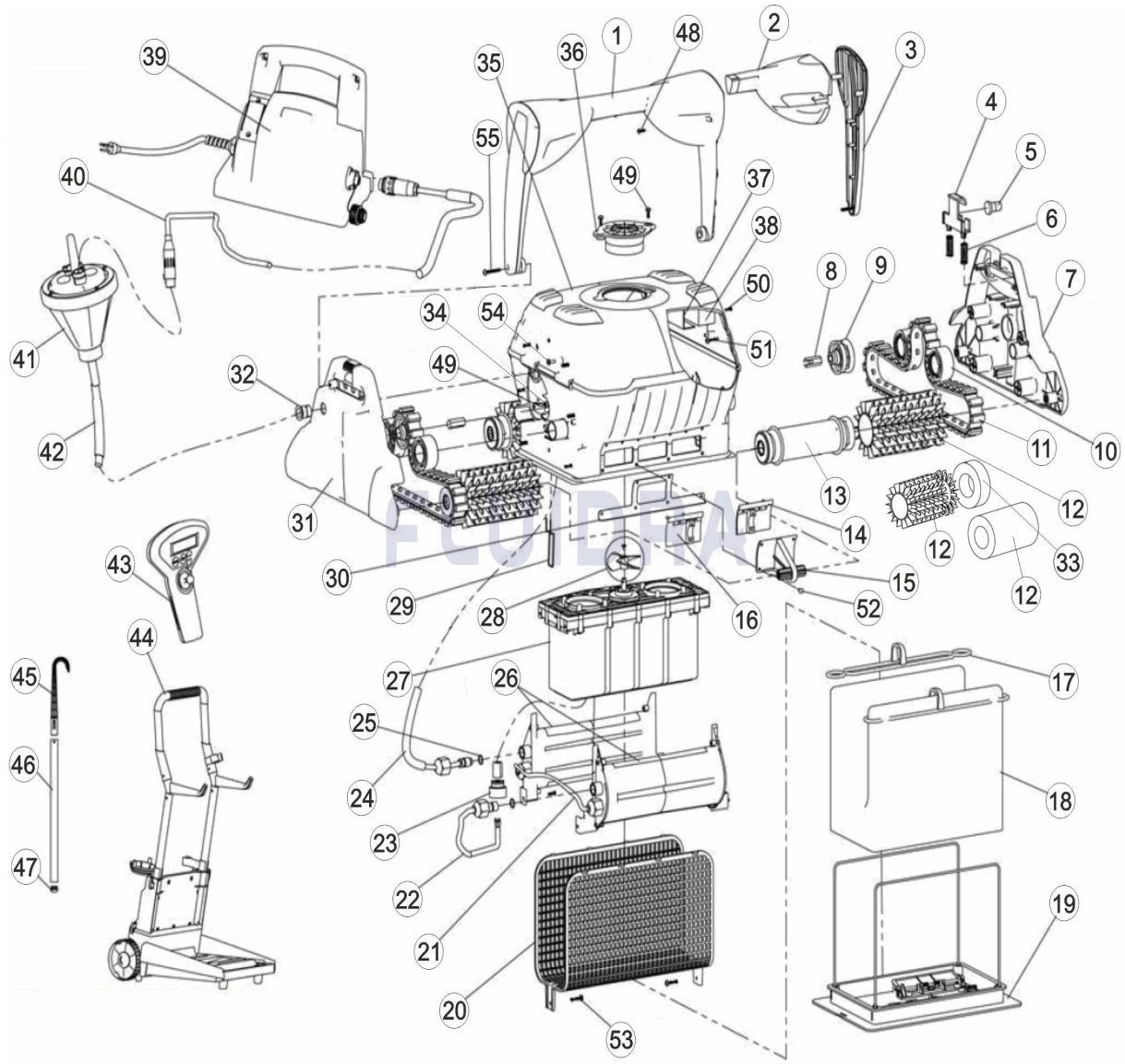

ENGLISH

POS	CODE	DESCRIPTION QUANTITY	POS	CODE	DESCRIPTION QUANTITY
1	9995717	HANDLE ASSY DOL 2 TIBERIUS	14	9985283	NON RETURN FLAP DYN LEFT-GREY
2	6250922	FLOAT FOR DOL.2 HANDLE	15	9980110	BRUSH HOLDER - DYNAMIC
3	9981060	HANDLE SIDE PLATE DOL.2	16	9985285	NON RETURN FLAP DYN RIGHT-GREY
4	9985064	HANDLE LATCH GREY	17	9981430	FILTER BAG CLIP
5	9985065	HANDLE ARM SLIDE	18	9995431-ASSY	FILTER BAG ASSY FOR DIAG AND DYN 150
6	3917031	HANDLE CLIP SPRING	18	9995430-ASSY	FILTER BAG ASSY FOR DIAG AND DYN 50M
7	9981020	SIDE PANEL DOL 2 ROYAL BLUE	18	9991440-ASSY	FILTER BAG DISP KIT OF 5 DIG DYN
8	3865005	HEXAGON ADAPTOR FOR D TYPE SHAFT	18	99954304-ASSY	FILTER BAG FOR TS FOR DIAG DYN
9	3884076	PULLEY FOR FLAT SHAFT	18	99954308-ASSY	FILTER BAG DOLPHIN 70 MICRONS
10	3884997	GUIDE WHEEL	19	9995550	BOTTOM LID ASSY + SUPPORT 2005
11	Z9985052	DRIVE BELT	20	6203703	FILTER SCREEN
12	6101624	BRUSH PVC FOR ULTRAKLEEN	21	9995960-ASSY	CABLE BETWEEN R&L BATTERIES
12	6101647	BRUSH PVC DYN CLEAR ORANGE CB	22	9995963-ASSY	CABLE BETWEEN MOTOR UNIT&BATTERY

CODE **34206**

DESCRIPTION: **DOLPHIN ULTRA KLEEN BATTERY**

12	9995560-ASSY	BRUSH WB - DYN - PAIR	23	9991279	RETROFIT FOR CABLE CONN.-3 PIN
13	9993197	UPGR DRIVE SYS-2007 DYN GREY	24	9995790-ASSY	CABLE ASSY DOLHIN PB 2.5 '
24	9995794-ASSY	CABLE FLOAT PRO-X BAT 3.5M' ASSY	39	9995640-ASSY	PS CHARGER BATTERY 230V
24	9995798-ASSY	CABLE ASSY DOL PB 4.5 '	40	9995959	CABLE BETWEEN CHARGER&FLOAT-ASSY
25	3862013	O RING 2-013	41	9991231	FLOAT ASSY FOR PLUS BATTERY
26	9991228-ASSY	BATTERY ASSY FOR PLUS BATTERY	42	9991753	SLEEVE FOR FLOATING CABLE
27	9995350LF-ASSY	MU DYN PLUS BATTERY LF ASSY	43	9995411	(not defined)
27	9995351LF-EX	MU DYN PLUS BATTERY LF EX	44	9996104	CADDY PLUS BATTERY
28	9995269	IMPELLER+SCREW DC	45	9980101	PIKE FOR DOLPHIN PB
29	3965030	WIRE CLIP	46	7300305	ALUMINIUM TUBE FOR CADDY
30	4197011	(NOT DEFINED)	47	3390514	CORK FOR PB PIKE
31	9995050	SIDE PANEL ASSY & SLEEVE DOL 2	48	3379450-A	SCREW KA40X12
32	9981165	CABLE FITTING - GREY	49	3379440-A	SCREW KA50X12 A2 WN1412
33	6101611	BRUSH WB RING FOR CB	50	3350213	SCREW 2,9X12 - 7982
34	2151208	STRAP 12,7 MM. FOR CABLE FLOAT	51	3379616-A	SCREW KA50X16
35	99951702	OUTER CASING ULTRA KLEEN BATTERY	52	3000484	POP NIT 4X15
36	9981040	COVER FOR IMPELLER DOL.2-ROYAL B	53	3379720-A	SCREW KA50X20
37	9985141	PLASTIC COVER FOR UPPER FLOAT	54	3154414-A	SCREW M4X14 - 7985
38	6250912	INNER UPPER FLOAT	55	3305030-A	SCREW KA50X30

CODICE **34206**

DESCRIZIONE: **DOLPHIN ULTRA KLEEN BATTERY**

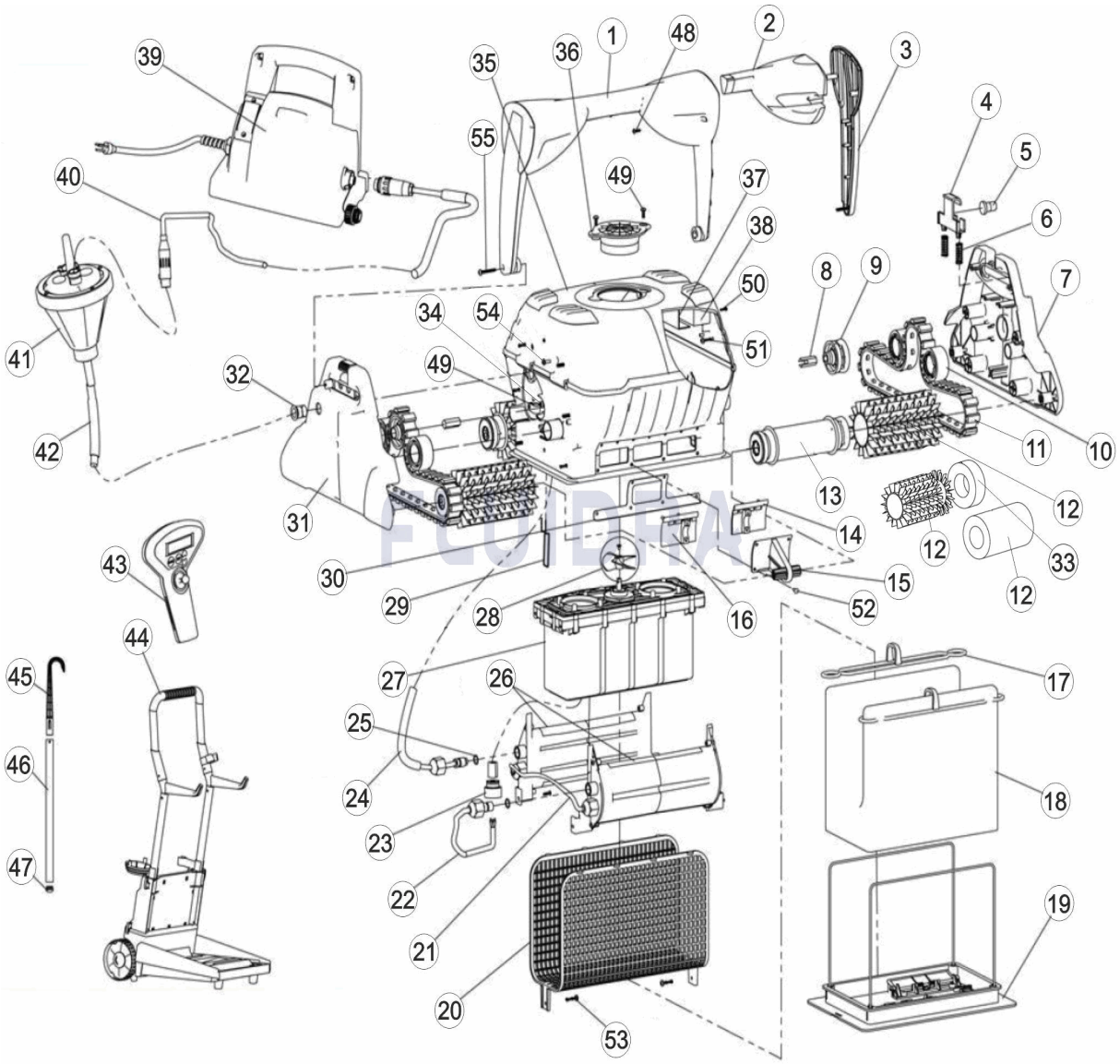

ITALIANO

POS	CODICE	DESCRIZIONE QUANTITA'	POS	CODICE	DESCRIZIONE QUANTITA'
1	9995717	(NOT DEFINED)	14	9985283	ALETTA SINISTRA CARCASSA DOLPHIN
2	6250922	GALLEGGIANTE MANICO DOL.ASTRAL KLE	15	9980110	SUPPORTO CENTRALE PER RULLI
3	9981060	PLACCA LATERALE MANICO DOL.ASTRAL	16	9985285	ALETTA CARCASSA DES..DOL.ULTRA/U.BAT
4	9985064	PULSANTE GRIGIO X MANICO	17	9981430	CLIP SACCO SPORCO DOLPHIN
5	9985065	INSERTO FISSA-MANICO DOL.ASTRAL KLE	18	9995431-ASSY	KIT SACCHETTO STAND.ASSY STEEL CLEA
6	3917031	MOLLA PULSANTE DOL.ASTRAL KLEEN	18	9995430-ASSY	SACCHETTO FILTRO X DOLPHIN 50 MICRO
7	9981020	PLACCA LATERALE S/FORO DOL.ASTRAL I	18	9991440-ASSY	(NOT DEFINED)
8	3865005	ADATT.ESAGONALE PER PULEGGIA 2X2	18	99954304-ASSY	SACCO DOLPHIN CON FORI
9	3884076	PULEGGIA PER ALBERO PIANO	18	99954308-ASSY	(NOT DEFINED)
10	3884997	DISCO GUIDA	19	9995550	CESTELLO COMPLETO PORTA SACCO DOL
11	Z9985052	CINGHIA DI TRASMISSIONE	20	6203703	RETE COPRIMOTORE DOLPHIN
12	6101624	SPAZZOLA PVC DOL.ULTRA/U.BATTERY KL	21	9995960-ASSY	CAVO TRA R&L BATTERIE
12	6101647	SPAZZOLA COMB. DOL.ULTRA/U.BATTERY	22	9995963-ASSY	CAVO TRA UNITA' MOT.E BATTERIA

CODICE **34206**

DESCRIZIONE: **DOLPHIN ULTRA KLEEN BATTERY**

12	9995560-ASSY	SPAZZOLA " MAGIC" X DYNAMIC-KIT 2P "	23	9991279	KIT CONNESSIONE CAVO-3 PIN
13	9993197	(NOT DEFINED)	24	9995790-ASSY	(NOT DEFINED)
24	9995794-ASSY	(NOT DEFINED)	39	9995640-ASSY	CARICATORE PER DOLPHIN PB 203V - NC
24	9995798-ASSY	(NOT DEFINED)	40	9995959	CAVETTO RICARICA DOLPHIN PLUS BATTE
25	3862013	O-RING 2-013	41	9991231	GALLEGGIANTE PER DOLPHIN PLUS BATTI
26	9991228-ASSY	KIT BATTERIE PER DOLPHIN PB	42	9991753	TERMOR.GENTE CAVO GALL.DOL.ASTRAL
27	9995350LF-ASSY	(NOT DEFINED)	43	9995411	(not defined)
27	9995351LF-EX	(NOT DEFINED)	44	9996104	(NOT DEFINED)
28	9995269	KIT VENTOLA MOTORE DOLPHIN	45	9980101	(NOT DEFINED)
29	3965030	PASSANTE INOX X CARCASSA DOLPHIN	46	7300305	TUBO RIC.X CARRELLO PORTA DOLPHIN T.
30	4197011	(NOT DEFINED)	47	3390514	(NOT DEFINED)
31	9995050	PLACCA LATERALE C/FORO DOL.ASTRAL I	48	3379450-A	(not defined)
32	9981165	(NOT DEFINED)	49	3379440-A	VITE KA50X12 A2 WN1412 BASICLEAN
33	6101611	ANELLO " MAGIC" X SPAZZOLE COMB "	50	3350213	(NOT DEFINED)
34	2151208	(NOT DEFINED)	51	3379616-A	VITE AUTOF.D.5X16 DOLPHIN
35	99951702	(NOT DEFINED)	52	3000484	RIVETTO 4X15 STEEL CLEAN
36	9981040	COPRIVENTOLA DOL.ASTRAL KLEEN	53	3379720-A	(not defined)
37	9985141	SUPP.LAT.CARCASSA D.6-12H T/N	54	3154414-A	(NOT DEFINED)
38	6250912	GALL.LAT.CARCASSA DOLPHIN	55	3305030-A	VITE PER MANICO D.2X2

CODE **34206**

BESCHREIBURG: **DOLPHIN ULTRA KLEEN BATTERY**

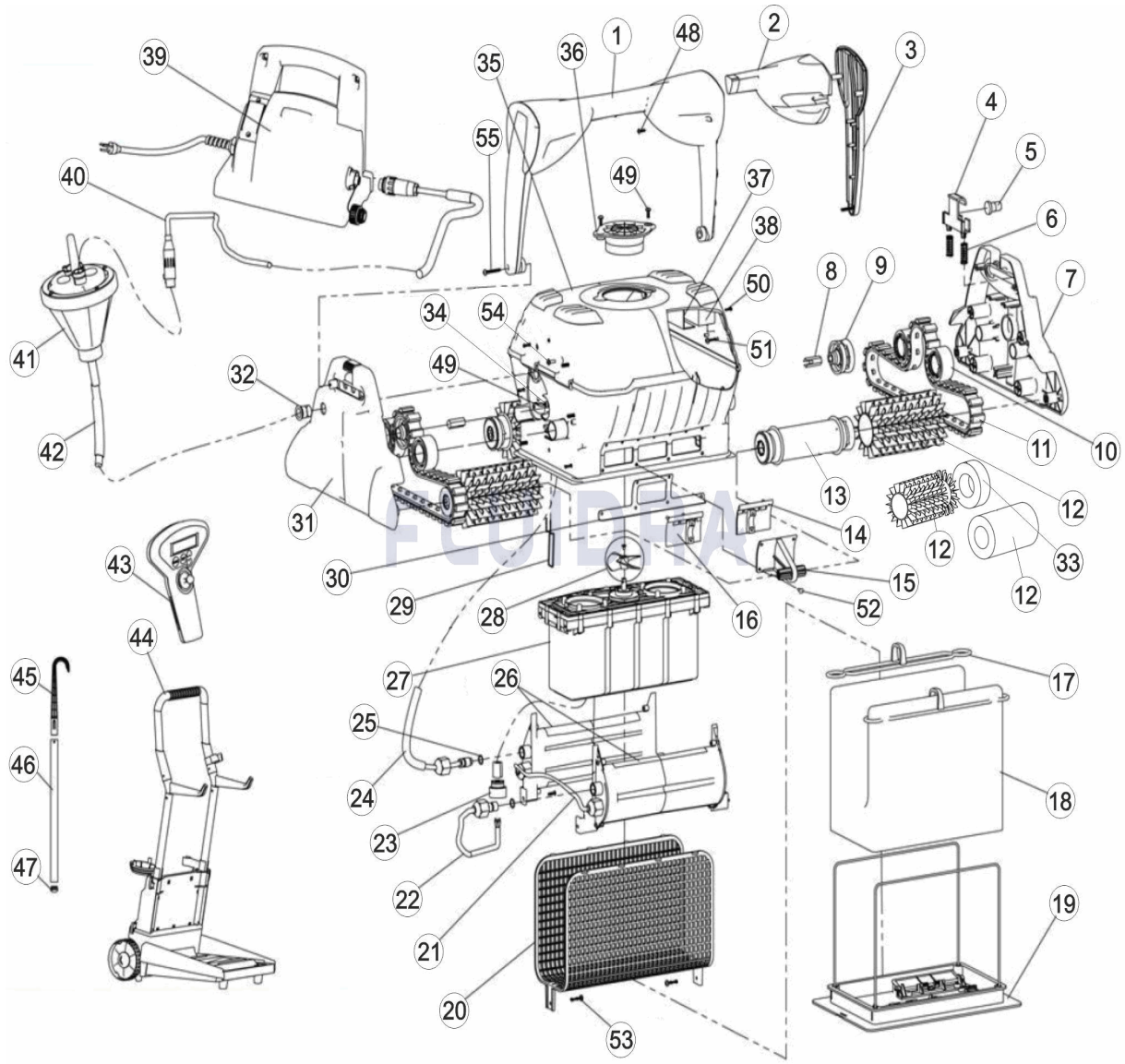

DEUTSCH

POS	CODE	BESCHREIBURG MENGE	POS	CODE	BESCHREIBURG MENGE
1	9995717	GRIFF FÜR TIBERIUS	14	9985283	RÜCKSCHLAGKLAPPE GRAU LINKS
2	6250922	SCHWIMMER FÜR GRIFF DOLPHIN 2	15	9980110	ROLLENHALTERUNG
3	9981060	SEITENDECKEL GRIFF DOLPHIN 2	16	9985285	RÜCKSCHLAGKLAPPE GRAU RECHTS
4	9985064	GRIFFHALTERUNG DUNKELGRAU MIT POS	17	9981430	CLIP FILTERBEUTEL DOLPHIN
5	9985065	STOPFEN GRIFF	18	9995431-ASSY	FILTERBEUTEL 150 MIKRON
6	3917031	FEDER GRIFFHALTERUNG DOLPHIN	18	9995430-ASSY	PACK DOLPHIN 50 MIKRON
7	9981020	SEITENDECKEL DOLPHIN 2 ROYAL BLAU	18	9991440-ASSY	PACK 5 BEUTEL EINWEG
8	3865005	HEXAGONALADAPTER FÜR ANTRIEBSSCH	18	99954304-ASSY	FILTERBEUTEL 50 MIKRON MIT LÖCHERN
9	3884076	ANTRIEBSSCHEIBE NEUVERSION FÜR FL/	18	99954308-ASSY	FILTERBEUTEL 70 MIKRON
10	3884997	RAD FÜHRUNG DOLPHIN	19	9995550	ABDECKUNG KOMPLETT JAHR 2005
11	Z9985052	ZUGRIEMEN	20	6203703	GITTER VORFILTER DOLPHIN
12	6101624	BÜRSTE REINIGER PVC ORANGE	21	9995960-ASSY	BATTERIEKABEL LINKS+RECHTS
12	6101647	BÜRSTE DYNAMIC C.B. REINIGER PVC OR	22	9995963-ASSY	SCHWIMMERKABEL FÜR DOLPHIN

CODE **34206**

BESCHREIBURG: **DOLPHIN ULTRA KLEEN BATTERY**

12	9995560-ASSY	BÜRSTE FÜR BODENREINIGER " MAGIC" D	23	9991279	ANSCHLUSSSET KABEL FÜR DYNAMIC DC
13	9993197	(NOT DEFINED)	24	9995790-ASSY	SCHWIMMERKABEL 2,5 M PB
24	9995794-ASSY	SCHWIMMERKABEL FÜR 3,5 M PB SCHWE	39	9995640-ASSY	LADEGERÄT 230 V PB
24	9995798-ASSY	SCHWIMMERKABEL FÜR 4,5 M PB	40	9995959	KABEL LADEGERÄT - SCHWIMMER PB
25	3862013	DICHTUNG 2 - 013 PB	41	9991231	SCHWIMMERSET BATTERIE
26	9991228-ASSY	SET BATTERIE PB	42	9991753	ABDECKUNG 18 X 6 BLAU
27	9995350LF-ASSY	MOTOR DIAGNOSTIC PLUS BATTERIE	43	9995411	FERNBEDIENUNG FÜR KLEEN BATTERY
27	9995351LF-EX	MOTOR DIAGNOSTIC PLUS BATTERIE EX	44	9996104	KARREN DOLPHIN PB
28	9995269	ANTRIEBSSCHRAUBE UND SCHRAUBE DC	45	9980101	RÜCKHOLGRIFF DOLPHIN PB
29	3965030	STIFT GEHÄUSE DOLPHIN	46	7300305	ROHR ALUMINIUM WAGEN
30	4197011	RÜCKSCHLAG	47	3390514	KORK FÜR GRIFF PB
31	9995050	SET ABDECKUNG DOLPHIN 2	48	3379450-A	SCHRAUBE KA40 X 12
32	9981165	QUETSCHVERSCHRAUBUNG KABEL	49	3379440-A	SCHRAUBE KA 50 X 12 A2
33	6101611	BÜRSTENRING MAGIC FÜR CB	50	3350213	SCHRAUBE DIN-7982 2,9 X 13
34	2151208	BEFESTIGUNGSFLANSCH SCHWIMMER	51	3379616-A	SCHRAUBE KA 50 X 16
35	99951702	GEHÄUSE ULTRS KLEEN BSTERIS	52	3000484	SCHRAUBE M4 X 15
36	9981040	ABDECKUNG TURBINE	53	3379720-A	SCHRAUBE K50 X 20
37	9985141	HALTERUNG SCHWIMMER SEITLICH	54	3154414-A	SCHRAUBE M-4 X 14 DIN-7985
38	6250912	SCHWIMMER OBEN (ALLE MODELLE)	55	3305030-A	SCHRAUBE KA 50 X 30

CODIGO **34206**

DESCRICÃO: **DOLPHIN ULTRA KLEEN BATTERY**

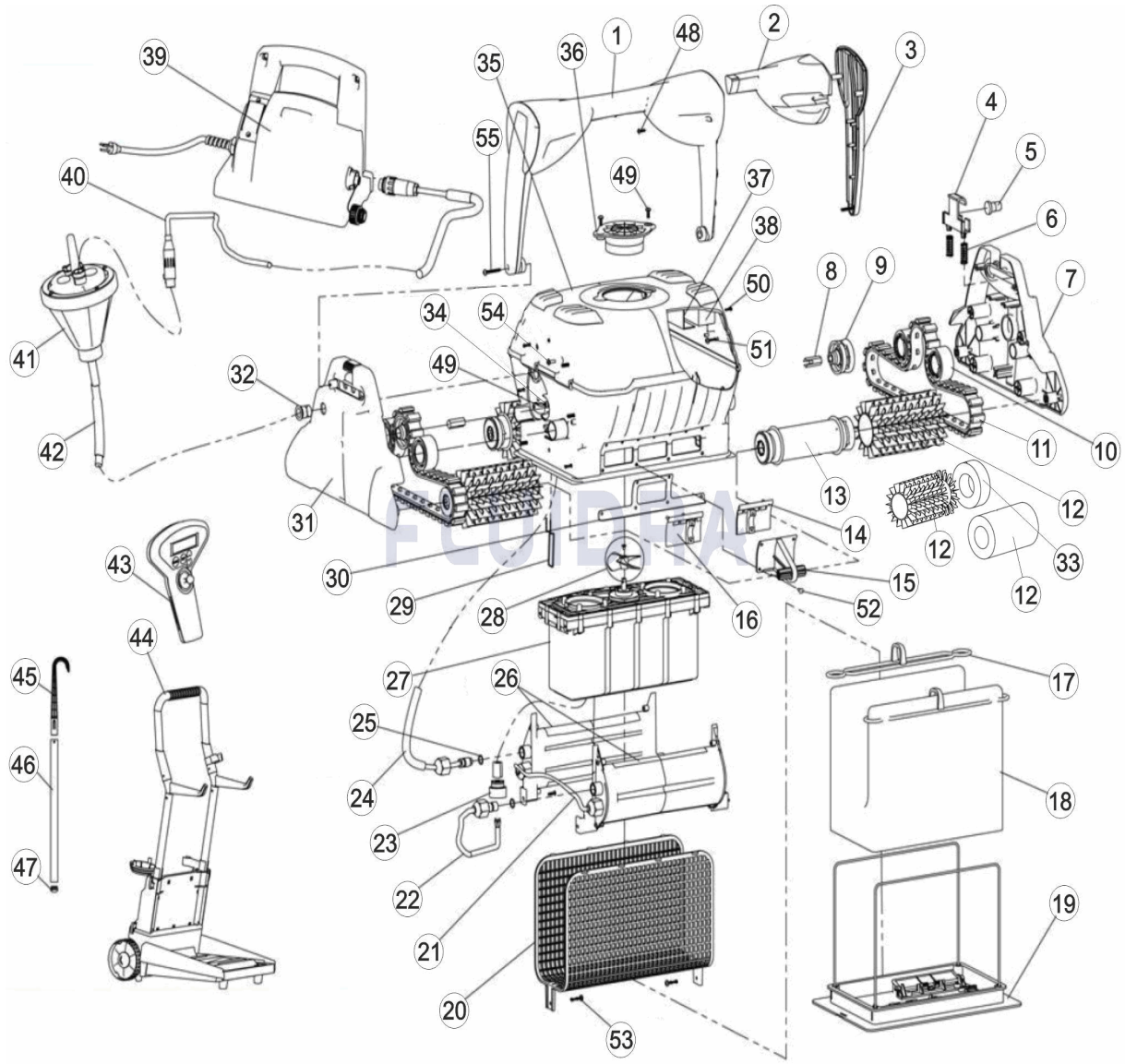

PORTUGUES

POS	CODIGO	DESCRICÃO	JANTIDADE	POS	CODIGO	DESCRICÃO	JANTIDADE
1	9995717	ASA TIBERIUS		14	9985283	FLAP ESQUERDO CINZENTO	
2	6250922	FLUTUADOR DE ASA DOLPHIN 2		15	9980110	SUPORTE INTERIOR- ROLO 2002/3002	
3	9981060	TAMPÃO LATERAL DE ASA " SUPERKLEEN		16	9985285	FLAP DIREITO CINZENTO	
4	9985064	(NOT DEFINED)		17	9981430	CLIP BOLSA FILTRO	
5	9985065	SLIDE DA ASA		18	9995431-ASSY	SACO FILTRANTE 150 UM (COARSE - APRC	
6	3917031	MOLA DO FIXADOR DA ASA		18	9995430-ASSY	SACO FILTRANTE 50 MICRONS	
7	9981020	LATERAL " SUPERKLEEN" E " ULTRAKLEE		18	9991440-ASSY	SACO FILTRANTE DESCARTÁVEL (KIT DE 5	
8	3865005	EIXO DO ROLAMENTO DE TRACÇÃO		18	99954304-ASSY	SACO FILTRANTE 15 UM, MOD. 2007	
9	3884076	ROLAMENTO DE TRACÇÃO PÓS 2003		18	99954308-ASSY	(NOT DEFINED)	
10	3884997	ROLAMENTO GUIA		19	9995550	TAMPA DO SACO FILTRANTE COMPLETA D	
11	Z9985052	CORREIA DE TRANSMISSÃO		20	6203703	REDE DE UNIDADE MOTORA	
12	6101624	ESCOVA PVC ULTRAKLEEN		21	9995960-ASSY	CABO ENTRE BATERIAS	
12	6101647	ESCOVA PVC LARANJA COM RASGO PARA		22	9995963-ASSY	CABO ENTRE UM E BATERIA	

CODIGO **34206**

DESCRICÃO: **DOLPHIN ULTRA KLEEN BATTERY**

12	9995560-ASSY	ESCOVA MÁGICA (CONJ. 2 UNID.) ULTRAKI	23	9991279	CONJUNTO LIGAÇÃO CABO-CAIXA DE MOT
13	9993197	(NOT DEFINED)	24	9995790-ASSY	(NOT DEFINED)
24	9995794-ASSY	(NOT DEFINED)	39	9995640-ASSY	CARREGADOR DE BATERIAS DE ULTRAKLI
24	9995798-ASSY	(NOT DEFINED)	40	9995959	CABO LIGAÇÃO CARREGADOR-FLUTUADO
25	3862013	(NOT DEFINED)	41	9991231	FLUTUADOR DE CABO PARA PLUS BA
26	9991228-ASSY	CONJ. BATERIAS P/ULTRAKLEEN BAT	42	9991753	MANGA RETRÁCTIL CABO AUTO-FLUTUAN
27	9995350LF-ASSY	(NOT DEFINED)	43	9995411	(not defined)
27	9995351LF-EX	(NOT DEFINED)	44	9996104	(NOT DEFINED)
28	9995269	TURBINA COM PARAFUSO TOPO	45	9980101	(NOT DEFINED)
29	3965030	CLIP TAMPA FILTRO	46	7300305	TUBO VERTICAL COMPLETO PARA CADDY
30	4197011	(NOT DEFINED)	47	3390514	(NOT DEFINED)
31	9995050	LATERAL " ULTRAKLEEN" E " SUPERKLEE	48	3379450-A	(not defined)
32	9981165	(NOT DEFINED)	49	3379440-A	(NOT DEFINED)
33	6101611	ANEL DE ESCOVA MÁGICA	50	3350213	(NOT DEFINED)
34	2151208	(NOT DEFINED)	51	3379616-A	PARAFUSO WN 50X16
35	99951702	(NOT DEFINED)	52	3000484	(NOT DEFINED)
36	9981040	PROTECÇÃO VENTILADOR SUPER E ULTR	53	3379720-A	(not defined)
37	9985141	COBERTURA PARA FLUTUADOR INTERNO	54	3154414-A	(NOT DEFINED)
38	6250912	FLUTUADOR INTERNO	55	3305030-A	PARAFUSO KA50X30