CODIGO **34205**

DESCRIPCION: **DOLPHIN ULTRA KLEEN**

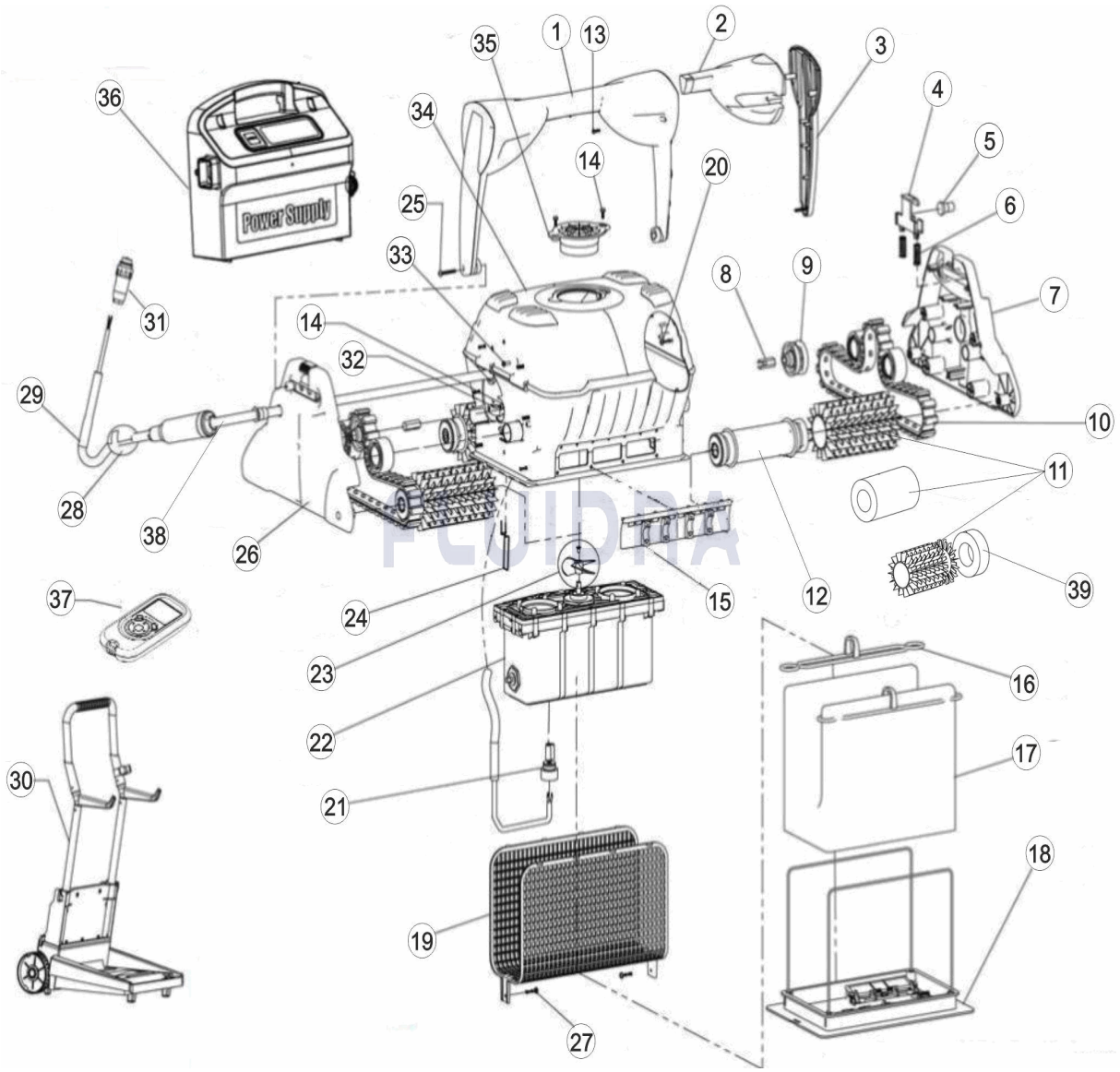

ESPAÑOL

POS	CODIGO	DESCRIPCION	CANTIDAD	POS	CODIGO	DESCRIPCION	CANTIDAD
1	9995717	ASA PARA TIBERIUS		14	3379440-A	TORNILLO KA 50X12 A2	
2	6250922	FLOTADOR PARA MANGO DOLPHIN 2		15	9985280	ALA ANTIRETORNO DIAG. - GRIS	
3	9981060	TAPA LADO PARA MANGO DOLPHIN 2		16	9981430	CLIP BOLSA FILTRO DOLPHIN	
4	9985064	SOPORTE MANGO GRIS O. C/POSICION		17	99954304-ASSY	BOLSA FILTRO 50 MICRAS C/AGUJEROS	
5	9985065	TAPON MANGO		17	99954308-ASSY	BOLSA FILTRO 70 MICRAS	
6	3917031	MUELLE SOPORTE MANGO DOLPHIN		18	9995550	TAPA COMPLETA AÑO 2005	
7	9981020	TAPA LADO PARA DOLPHIN 2 ROYAL AZUL		19	6203703	REJILLA PREFILTRO DOLPHIN	
8	3865005	ADAPTADOR HEXAGONAL POLEA NUEVA		20	3379616-A	TORNILLO KA 50X16	
9	3884076	POLEA NUEVA PARA EJE PLANO		21	9991279	CONJUNTO CONEXION CABLE PARA DYNA	
10	9985006	CORREA TRACCION GRIS-MODELO 2007		22	9995330RD-ASSY	MOTOR DYN PLUS	
11	6101624	CEPILLO LIMPIADOR PVC NARANJA		22	9995331RD-EX	MOTOR DYNAMIC PLUS REACONDICIONAI	
11	6101647	CEPILLO DYNAMIC C.B. LIMPIADOR PVC N		23	9995269	ELICE IMPULSION+TORNILLO DC	
11	9995560-ASSY	CEPILLO PARA LIMPIAFONDO " MAGIC" D'		24	3965030	PASADOR CARCASA DOLPHIN	

CODIGO **34205**

DESCRIPCION: **DOLPHIN ULTRA KLEEN**

12	9993197	KIT TRACCION DYN GRIS	25	3305030	TORNILLO KA 50X30
13	3379450-A	TORNILLO KA40X12	26	9995050	CONJ. LADO PANEL + FUNDA DOLPHIN 2
27	3379720-A	TORNILLO K50X20	34	99951700	KIT CUERPO ULTRAKLEEN
28	9995090	FLOTADOR PARA CABLE PLUS+PRO 2X2	35	9981040	TAPA TURBINA
29	9995872-DIY	CABLE CON GIRO 18M DYNAMIC 3 HILOS I	36	9995651-ASSY	TRANSFORMADOR DINAMIC 230V RESET
29	9995853-DIY	CABLE DOLPHIN 18 M. 3 HILOS DIY	36	9995671-ASSY	TRANSFORMADOR PULIT E90 2010
30	9996098-ASSY	CARRO DOLPHIN CADDY 2011	37	99954226-ASSY	MANDO A DISTANCIA PULIT E90
31	5000009	ENCHUFE CABLE TRANSFORMADOR	38	9995791-ASSY	CABLE FLOTADOR CON GIRO DYN 1,2 M
32	9991069-ASSY	PORTA CABLES PROX 2	39	6101611	ARO CEPILLO MAGIC PARA CB
33	3154414-A	TORNILLO M-4X14 DIN-7985			

CODE **34205**

DESCRIPTION: **DOLPHIN ULTRA KLEEN**

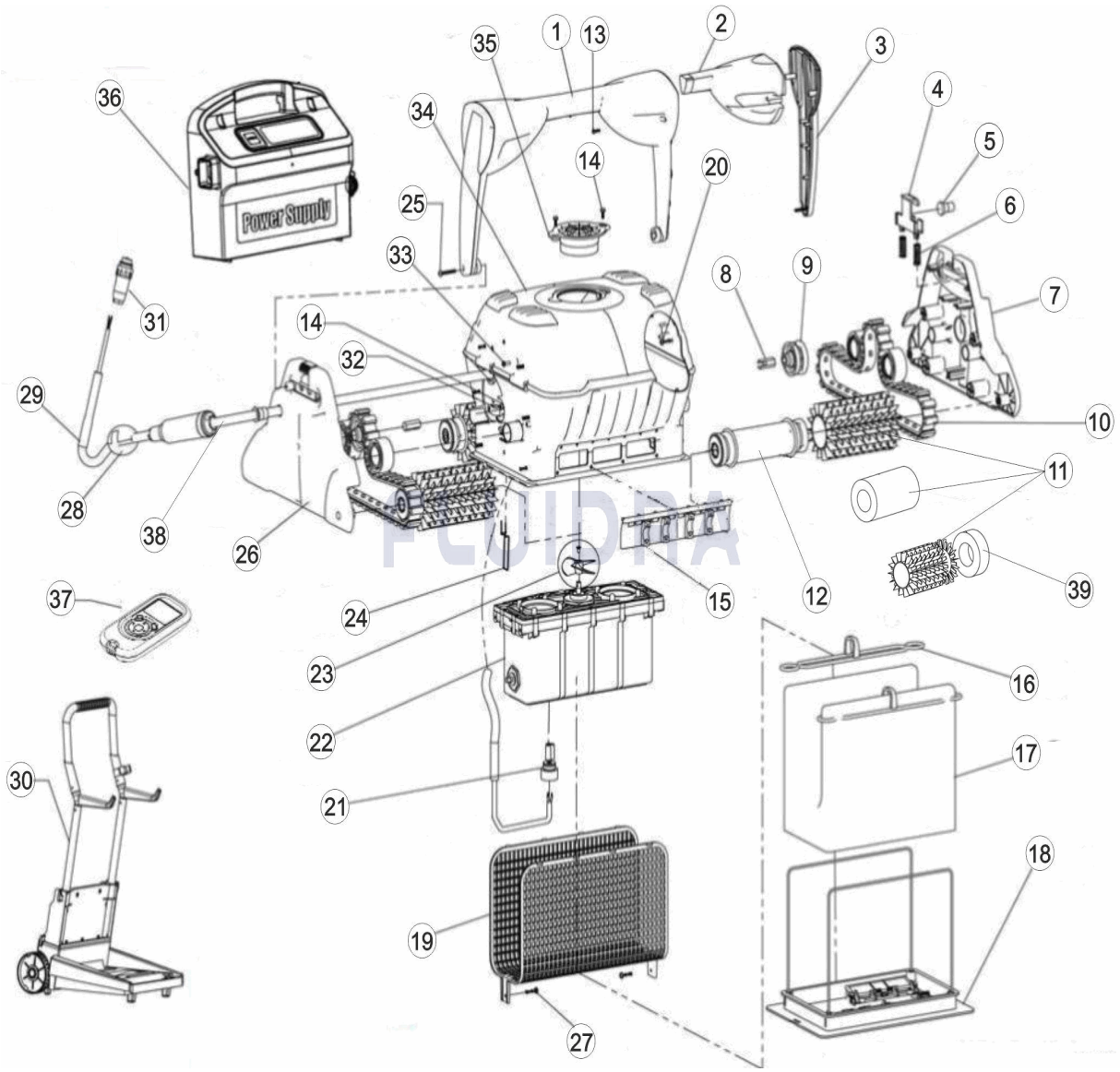

FRANCAIS

POS	CODE	DESCRIPTION	QUANTITE	POS	CODE	DESCRIPTION	QUANTITE
1	9995717	POIGNEE TIBERIUS		14	3379440-A	VIS KA 50X12 EASYKLEEN	
2	6250922	FLOTTEUR POIGNEE		15	9985280	COUV.ENTRAIN. AXE MOTE-9985280	
3	9981060	FLASQUE LATERALE		16	9981430	CLIP SAC FILTRANT DOLPHIN	
4	9985064	BLOQUE POIGNEE SUPERKLEEN		17	99954304-ASSY	SAC SUPERKLEEN PERFORE	
5	9985065	CALE FIXATION/POIGNEE 9985065		17	99954308-ASSY	SAC FILTRANT 70 MICRONS	
6	3917031	RESSORT POIGNEE DOLPHIN		18	9995550	PORTE SAC DOLPHIN COMPLET	
7	9981020	FLASQUE LATERALE		19	6203703	GRILLE PROTECTION SAC	
8	3865005	ADAPTATEUR ROUE HEXAGONALE - 3865(		20	3379616-A	VIS KA50X16	
9	3884076	ROUE ENTRAINEMENT		21	9991279	KIT PRISE PE DE DOLPHIN 9991279	
10	9985006	COURROIE DE TRACTION TT GRISE		22	9995330RD-ASSY	BLOC MOTEUR DYN PLUS	
11	6101624	BROSSE PVC ORANGE		22	9995331RD-EX	BLOC MOTEUR DYN PLUS RECONDITIONN	
11	6101647	1/2 BROSSE PVC ORANGE PREDECOUPEI		23	9995269	TURBINE DOLPHIN	
11	9995560-ASSY	WONDER BRUSH DYNAMIC		24	3965030	CLIP VERROUILLAGE CARCASSE	

CODE **34205**

DESCRIPTION: **DOLPHIN ULTRA KLEEN**

12	9993197	(NOT DEFINED)	25	3305030	VIS KA50X30 EASYKLEEN
13	3379450-A	VIS KA40X12	26	9995050	FLASQUE LATERALE COUVRANTE
27	3379720-A	VIS K50X20	34	99951700	CARCASSE ULTRAKLEEN
28	9995090	FLOTTEUR CABLE DYN PLUS	35	9981040	CACHE TURBINE
29	9995872-DIY	CABLE 3 FILS 18 METRES AVCE SWIVEL	36	9995651-ASSY	TRANSFORMATEUR DYNAMIC
29	9995853-DIY	CABLE DOLPHIN 18 M. 3 FILS DIY	36	9995671-ASSY	TRANSFORMATEUR DYN EU 2010
30	9996098-ASSY	CHARIOT DB	37	99954226-ASSY	TELECOMMANDE 2010
31	5000009	PRISE CABLE TRANSFORMATEUR	38	9995791-ASSY	CABLE AUTOFLOTTANT 1,2M 3 FILS AVEC :
32	9991069-ASSY	FIXATION CABLE PROX-2	39	6101611	ANNEAU WONDER BRUSH
33	3154414-A	VIS M-4X14 DIN-7985			

CODE **34205**

DESCRIPTION: **DOLPHIN ULTRA KLEEN**

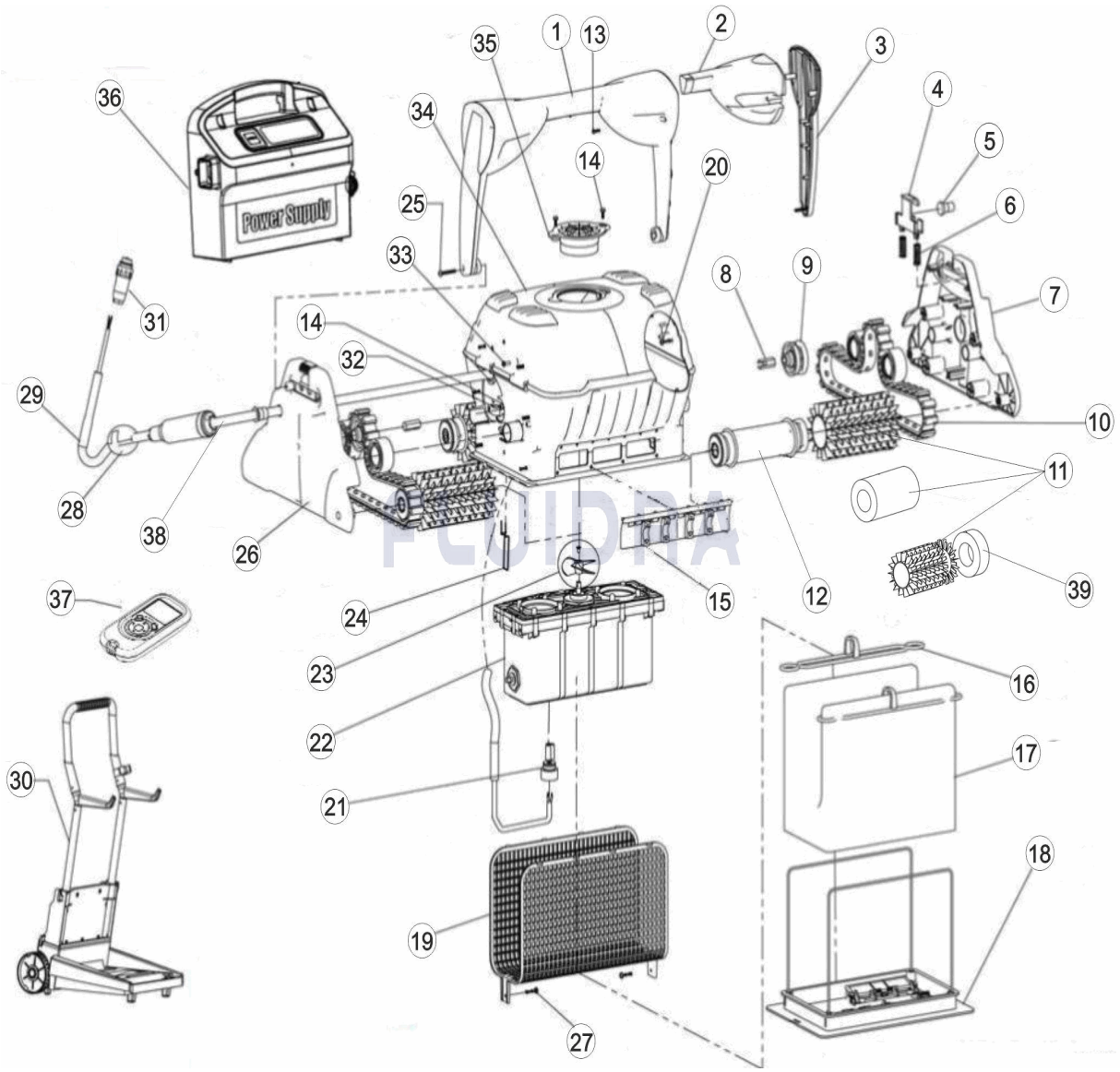

ENGLISH

POS	CODE	DESCRIPTION	QUANTITY	POS	CODE	DESCRIPTION	QUANTITY
1	9995717	HANDLE ASSY DOL 2 TIBERIUS		14	3379440-A	SCREW KA50X12 A2 WN1412	
2	6250922	FLOAT FOR DOL.2 HANDLE		15	9985280	NON RETURN FLAP DIAG-GREY	
3	9981060	HANDLE SIDE PLATE DOL.2		16	9981430	FILTER BAG CLIP	
4	9985064	HANDLE LATCH GREY		17	99954304-ASSY	FILTER BAG FOR TS FOR DIAG DYN	
5	9985065	HANDLE ARM SLIDE		17	99954308-ASSY	FILTER BAG DOLPHIN 70 MICRONS	
6	3917031	HANDLE CLIP SPRING		18	9995550	BOTTOM LID ASSY + SUPPORT 2005	
7	9981020	SIDE PANEL DOL 2 ROYAL BLUE		19	6203703	FILTER SCREEN	
8	3865005	HEXAGON ADAPTOR FOR D TYPE SHAFT		20	3379616-A	SCREW KA50X16	
9	3884076	PULLEY FOR FLAT SHAFT		21	9991279	RETROFIT FOR CABLE CONN.-3 PIN	
10	9985006	TRACK - TIMING TRACK GREY		22	9995330RD-ASSY	MU DYN PLUS RD ASSY	
11	6101624	BRUSH PVC FOR ULTRAKLEEN		22	9995331RD-EX	MU DYN PLUS RD EX	
11	6101647	BRUSH PVC DYN CLEAR ORANGE CB		23	9995269	IMPELLER+SCREW DC	
11	9995560-ASSY	BRUSH WB - DYN - PAIR		24	3965030	WIRE CLIP	

CODE **34205**

DESCRIPTION: **DOLPHIN ULTRA KLEEN**

12	9993197	UPGR DRIVE SYS-2007 DYN GREY	25	3305030	SCREW KA50X30
13	3379450-A	SCREW KA40X12	26	9995050	SIDE PANEL ASSY & SLEEVE DOL 2
27	3379720-A	SCREW KA50X20	34	99951700	OUTER CASING ULTRA KLEEN
28	9995090	CABLE FLOAT ASSY	35	9981040	COVER FOR IMPELLER DOL.2-ROYAL B
29	9995872-DIY	CABLE AND SWV ASSY 18M DYN	36	9995651-ASSY	PS DYN 230V RESET
29	9995853-DIY	CABLE DOLPHIN 18 M. 3 WIRES DIY	36	9995671-ASSY	PS DYN EUR 2010
30	9996098-ASSY	CADDY DB	37	99954226-ASSY	RCU DYN 2010
31	5000009	AMPHENOL PLUG	38	9995791-ASSY	CABLE FLOAT SWV DYN 1.2M ASSY
32	9991069-ASSY	CABLE HOLDER KIT	39	6101611	BRUSH WB RING FOR CB
33	3154414-A	SCREW M4X14 - 7985			

CODICE **34205**

DESCRIZIONE: **DOLPHIN ULTRA KLEEN**

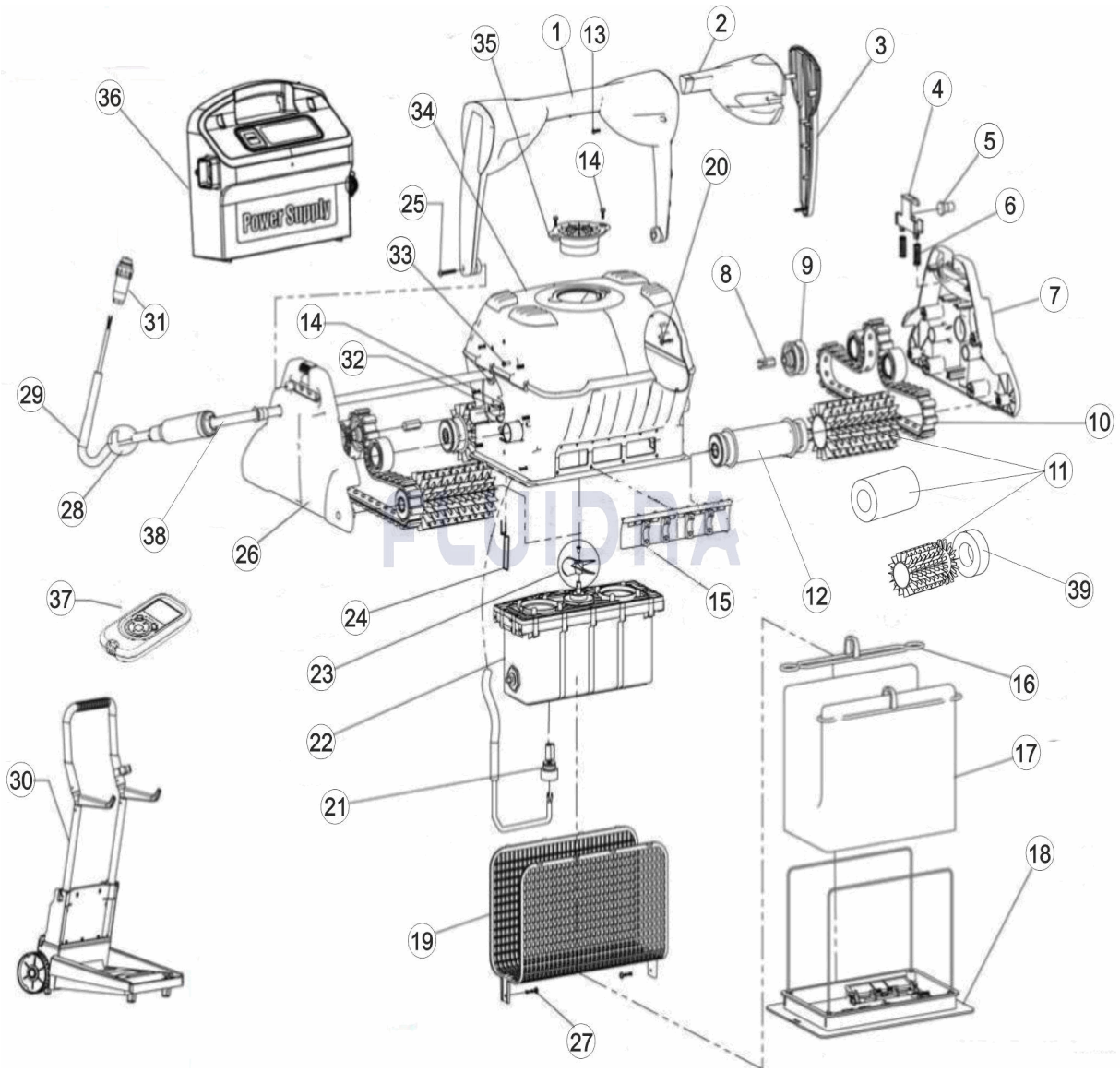

ITALIANO

POS	CODICE	DESCRIZIONE	QUANTITA'	POS	CODICE	DESCRIZIONE	QUANTITA'
1	9995717	(NOT DEFINED)		14	3379440-A	VITE KA50X12 A2 WN1412 BASICLEAN	
2	6250922	GALLEGGIANTE MANICO DOL.ASTRAL KLE		15	9985280	ALETTA CARCASSA DOL.SUPER KLEEN	
3	9981060	PLACCA LATERALE MANICO DOL.ASTRAL		16	9981430	CLIP SACCO SPORCO DOLPHIN	
4	9985064	PULSANTE GRIGIO X MANICO		17	99954304-ASSY	SACCO DOLPHIN CON FORI	
5	9985065	INSERTO FISSA-MANICO DOL.ASTRAL KLE		17	99954308-ASSY	(NOT DEFINED)	
6	3917031	MOLLA PULSANTE DOL.ASTRAL KLEEN		18	9995550	CESTELLO COMPLETO PORTA SACCO DOL	
7	9981020	PLACCA LATERALE S/FORO DOL.ASTRAL I		19	6203703	RETE COPRIMOTORE DOLPHIN	
8	3865005	ADATT.ESAGONALE PER PULEGGIA 2X2		20	3379616-A	VITE AUTOF.D.5X16 DOLPHIN	
9	3884076	PULEGGIA PER ALBERO PIANO		21	9991279	KIT CONNESSIONE CAVO-3 PIN	
10	9985006	CINGOLO TRAZ.PVC EASYKLEEN GRIGIO		22	9995330RD-ASSY	MOTORE DOLPHIN-D.DYN.3H DC T/N	
11	6101624	SPAZZOLA PVC DOL.ULTRA/U.BATTERY KL		22	9995331RD-EX	MU DYN PLUS RD EX 3H	
11	6101647	SPAZZOLA COMB. DOL.ULTRA/U.BATTERY		23	9995269	KIT VENTOLA MOTORE DOLPHIN	
11	9995560-ASSY	SPAZZOLA " MAGIC" X DYNAMIC-KIT 2P "		24	3965030	PASSANTE INOX X CARCASSA DOLPHIN	

CODICE **34205**

DESCRIZIONE: **DOLPHIN ULTRA KLEEN**

12	9993197	(NOT DEFINED)	25	3305030	VITE PER MANICO D.2X2
13	3379450-A	(not defined)	26	9995050	PLACCA LATERALE C/FORO DOL.ASTRAL K
27	3379720-A	(not defined)	34	99951700	CARCASSA PER DOL.ULTRA KLEEN
28	9995090	FLOTTANTE CAVO ASSY STEEL CLEAN	35	9981040	COPRIVENTOLA DOL.ASTRAL KLEEN
29	9995872-DIY	(NOT DEFINED)	36	9995651-ASSY	(NOT DEFINED)
29	9995853-DIY	(NOT DEFINED)	36	9995671-ASSY	TRASF.DGT X.DYNAMIC C/DISPLAY
30	9996098-ASSY	CARRELLO PORTA D.BASIC (CADDY)	37	99954226-ASSY	(NOT DEFINED)
31	5000009	SPINA TRASF.T/N X DOLPHIN	38	9995791-ASSY	(NOT DEFINED)
32	9991069-ASSY	KIT FISSACAVO DOLPHIN PROX2	39	6101611	ANELLO " MAGIC" X SPAZZOLE COMB "
33	3154414-A	(NOT DEFINED)			

CODE **34205**

BESCHREIBURG: **DOLPHIN ULTRA KLEEN**

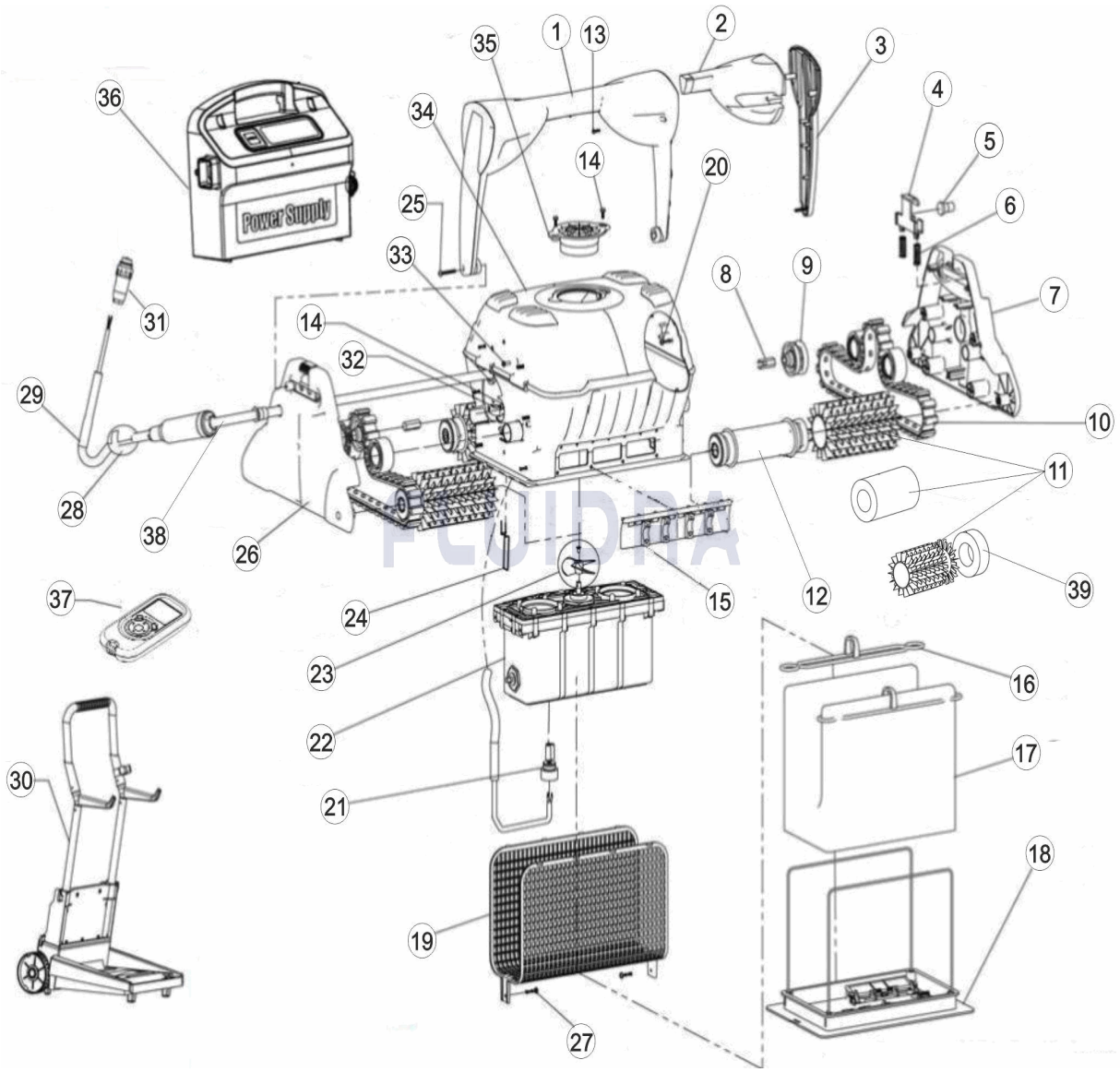

DEUTSCH

POS	CODE	BESCHREIBURG	MENGE	POS	CODE	BESCHREIBURG	MENGE
1	9995717	GRIFF FÜR TIBERIUS		14	3379440-A	SCHRAUBE KA 50 X 12 A2	
2	6250922	SCHWIMMER FÜR GRIFF DOLPHIN 2		15	9985280	RÜCKSCHLAGKLAPPE DIAG. - GRAU	
3	9981060	SEITENDECKEL GRIFF DOLPHIN 2		16	9981430	CLIP FILTERBEUTEL DOLPHIN	
4	9985064	GRIFFHALTERUNG DUNKELGRAU MIT POS		17	99954304-ASSY	FILTERBEUTEL 50 MIKRON MIT LÖCHERN	
5	9985065	STOPFEN GRIFF		17	99954308-ASSY	FILTERBEUTEL 70 MIKRON	
6	3917031	FEDER GRIFFHALTERUNG DOLPHIN		18	9995550	ABDECKUNG KOMPLETT JAHR 2005	
7	9981020	SEITENDECKEL DOLPHIN 2 ROYAL BLAU		19	6203703	GITTER VORFILTER DOLPHIN	
8	3865005	HEXAGONALADAPTER FÜR ANTRIEBSSCH		20	3379616-A	SCHRAUBE KA 50 X 16	
9	3884076	ANTRIEBSSCHEIBE NEUVERSION FÜR FL/		21	9991279	ANSCHLUSSSET KABEL FÜR DYNAMIC DC	
10	9985006	ZUGRIEMEN GRAU - MODELL 2007		22	9995330RD-ASSY	MOTOR DYN PLUS	
11	6101624	BÜRSTE REINIGER PVC ORANGE		22	9995331RD-EX	MOTOR DYNAMIC PLUS 24 V	
11	6101647	BÜRSTE DYNAMIC C.B. REINIGER PVC OR		23	9995269	ANTRIEBSSCHRAUBE UND SCHRAUBE DC	
11	9995560-ASSY	BÜRSTE FÜR BODENREINIGER " MAGIC" [		24	3965030	STIFT GEHÄUSE DOLPHIN	

CODE **34205**

BESCHREIBURG: **DOLPHIN ULTRA KLEEN**

12	9993197	(NOT DEFINED)	25	3305030	SCHRAUBE KA 50 X 30
13	3379450-A	SCHRAUBE KA40 X 12	26	9995050	SET ABDECKUNG DOLPHIN 2
27	3379720-A	SCHRAUBE K50 X 20	34	99951700	KIT GEHÄUSE ULTRAKLEEN
28	9995090	SCHWIMMER FÜR KABEL PLUS+PRO 2X2	35	9981040	ABDECKUNG TURBINE
29	9995872-DIY	KABEL SCHWENKBAR 18 M DYNAMIC 3 FA	36	9995651-ASSY	TRAFO DINAMIC 230 V RESET
29	9995853-DIY	(NOT DEFINED)	36	9995671-ASSY	TRAFO PULIT E90 2010
30	9996098-ASSY	KARREN DOLPHIN DB	37	99954226-ASSY	FERNBEDIENUNG PULIT E90
31	5000009	STECKDOSE KABEL TRAFO	38	9995791-ASSY	SCHWIMMKABEL DYN 1,2 M SCHWENKBAR
32	9991069-ASSY	KABELHALTERUNG PROX 2	39	6101611	BÜRSTENRING MAGIC FÜR CB
33	3154414-A	SCHRAUBE M-4 X 14 DIN-7985			

CODIGO **34205**

DESCRICÃO: **DOLPHIN ULTRA KLEEN**

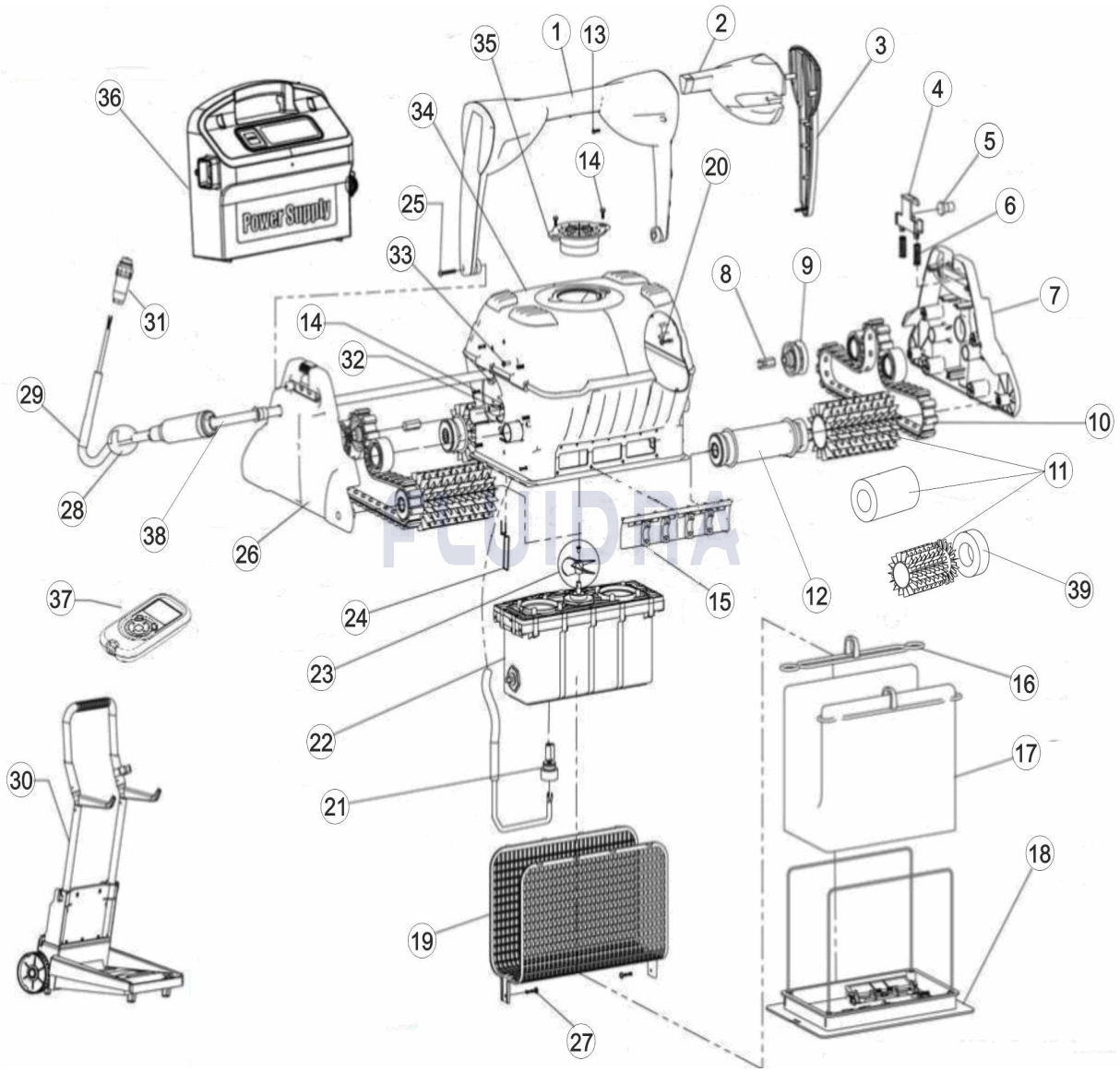

PORTUGUES

POS	CODIGO	DESCRICÃO JANTIDADE	POS	CODIGO	DESCRICÃO JANTIDADE
1	9995717	ASA TIBERIUS	14	3379440-A	(NOT DEFINED)
2	6250922	FLUTUADOR DE ASA DOLPHIN 2	15	9985280	FLAP GRIS 2001/3001
3	9981060	TAMPÃO LATERAL DE ASA " SUPERKLEEN	16	9981430	CLIP BOLSA FILTRO
4	9985064	(NOT DEFINED)	17	99954304-ASSY	SACO FILTRANTE 15 UM, MOD. 2007
5	9985065	SLIDE DA ASA	17	99954308-ASSY	(NOT DEFINED)
6	3917031	MOLA DO FIXADOR DA ASA	18	9995550	TAMPA DO SACO FILTRANTE COMPLETA D
7	9981020	LATERAL " SUPERKLEEN" E " ULTRAKLEE	19	6203703	REDE DE UNIDADE MOTORA
8	3865005	EIXO DO ROLAMENTO DE TRACÇÃO	20	3379616-A	PARAFUSO WN 50X16
9	3884076	ROLAMENTO DE TRACÇÃO PÓS 2003	21	9991279	CONJUNTO LIGAÇÃO CABO-CAIXA DE MOT
10	9985006	CORREIA " TIMING TRACK" CINZENT "	22	9995330RD-ASSY	(NOT DEFINED)
11	6101624	ESCOVA PVC ULTRAKLEEN	22	9995331RD-EX	CONJUNTO MOTOR DYNAMIC DC PLUS / 2(
11	6101647	ESCOVA PVC LARANJA COM RASGO PARA	23	9995269	TURBINA COM PARAFUSO TOPO
11	9995560-ASSY	ESCOVA MÁGICA (CONJ. 2 UNID.) ULTRAKI	24	3965030	CLIP TAMPA FILTRO

ASTRALPOOL

ITEM

REV.: **1** **830**
DATA: **28/05/2021**
FOLHA: **12/12**

CODIGO **34205**

DESCRICÃO: **DOLPHIN ULTRA KLEEN**

12	9993197	(NOT DEFINED)	25	3305030	PARAFUSO KA50X30
13	3379450-A	(not defined)	26	9995050	LATERAL " ULTRAKLEEN" E " SUPERKLEEN
27	3379720-A	(not defined)	34	99951700	(NOT DEFINED)
28	9995090	FLUTUADOR DE CABO - DOLPHIN	35	9981040	PROTECÇÃO VENTILADOR SUPER E ULTRA
29	9995872-DIY	CABO 18 M, C/SWIVEL, 3 CONDUCTORES	36	9995651-ASSY	FONTE ALIMENTAÇÃO PARA PLUS, PRO-X
29	9995853-DIY	CABO DOLPHIN 18 M. 3W DIY	36	9995671-ASSY	FONTE DE ALIMENTAÇÃO DYN EUR 2010
30	9996098-ASSY	CARRO DE TRANSPORTE DE ASPIRADOR	37	99954226-ASSY	COMANDO UNIVERSAL DYN 2010
31	5000009	FICHA CABO FONTE ALIMENTAÇÃO	38	9995791-ASSY	TROÇO DE 1.2 M DE CABO COM SWIVEL - D
32	9991069-ASSY	KIT FIXADOR DE CABO	39	6101611	ANEL DE ESCOVA MÁGICA
33	3154414-A	(NOT DEFINED)			