CODIGO **41597, 41598, 41599, 41600, 41601, 41602, 41603, 41604, 41605, 41606**

DESCRIPCION: **BOMBA ASTRAL ALASKA MAX**

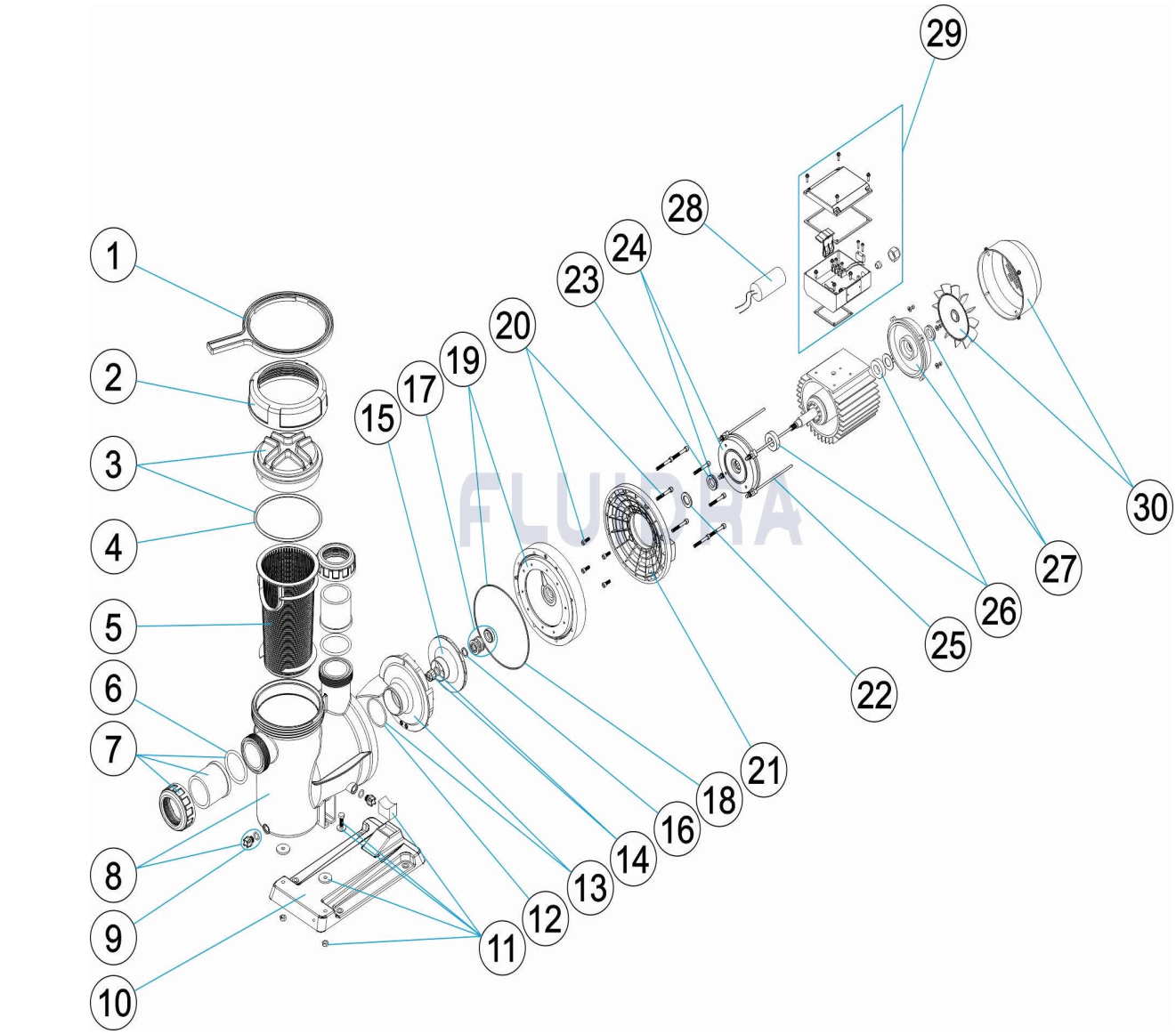

ESPAÑOL

POS	CODIGO	DESCRIPCION CANTIDAD	POS	CODIGO	DESCRIPCION CANTIDAD
1	4405011101	LLAVE TUERCA TAPA BOMBA	13	* 4405010116	DIFUSOR 1 HP - 2 HP
2	4405011102	TUERCA TAPA	13	* 4405010117	DIFUSOR 2,5 - 3 HP
3	4405010702	TAPA PREFILTRO	14	4405010134	TAPÓN RODETE M8 IZQUIERDA
4	4405010178	JUNTA TORICA D. 151,7X6,99	15	* 4405010591	RODETE ½ (II) HP
5	4405011103	CESTO PREFILTRO	15	* 4405010667	RODETE ½ (II) HP 60 HZ
6	4405010773	JUNTA TORICA MANGUITO	15	* 4405010593	RODETE ¾ (II) HP
7	* 4405012005	ACCESORIOS ENLACE D. 50	15	* 4405010669	RODETE ¾ (II) HP 60 HZ
7	* 4405012007	ACCESORIOS ENLACE D. 63	15	* 4405010595	RODETE 1 (II) HP
8	4405011106	CUERPO BOMBA	15	* 4405010671	RODETE 1 (II) HP 60 HZ
9	4404121107	TAPON ¼' VALVULA	15	* 4405010596	RODETE 1 (III) HP
10	4405011107	PIE BOMBA	15	* 4405010672	RODETE 1 (III) HP 60 HZ
11	* 4405010112	UNIÓN HIDRÁULICA PIE 0,75 - 1,5 HP	15	* 4405010597	RODETE 1,5 (II) HP
11	* 4405010113	UNIÓN HIDRÁULICA PIE 1,5 HP - 3 HP	15	* 4405010673	RODETE 1,5 (II) HP 60 HZ

*** NOTA OBSERVACIONES**

CODIGO **41597, 41598, 41599, 41600, 41601, 41602, 41603, 41604, 41605, 41606**

DESCRIPCION: **BOMBA ASTRAL ALASKA MAX**

12	4405010161	JUNTA TORICA D. 56,7X3,5	15	* 4405010598	RODETE 1,5 (III) HP
13	* 4405010115	DIFUSOR <=0,75 HP	15	* 4405010674	RODETE 1,5 (III) HP 60 HZ
15	* 4405010599	RODETE 2 (II) HP	25	* 4405011206	VARILLA MOTOR (0,5 - 0,75 HP LL 1 HP III)
15	* 4405010675	RODETE 2 (II) HP 60 HZ	25	* 4405011125	VARILLA MOTOR M5X185 (1 HP II)
15	* 4405010600	RODETE 2 (III) HP	25	* 4405011126	VARILLA MOTOR M-6X185 (1,5-2 HP II)
15	* 4405010676	RODETE 2 (III) HP 60 HZ	25	* 4405011127	VARILLA MOTOR M-6X190 (1,5 HP III)
15	* 4405010601	RODETE 3 (II) HP	25	* 4405011128	VARILLA MOTOR M-6X210 (2 HP III)
15	* 4405010677	RODETE 3 (II) HP 60 HZ	25	* 4405011129	VARILLA MOTOR M6X220 (3 HP II)
15	* 4405010602	RODETE 3 (III) HP	25	* 4405011130	VARILLA MOTOR M-6X240 (3 HP III)
15	* 4405010678	RODETE 3 (III) HP 60 HZ	26	* 4405010135	RODAMIENTO MOTOR < 1 HP
16	4405010162	ARANDELA DISTANCIADORA (1/2-3/4-1-1,5-	26	* 4405010136	RODAMIENTO MOTOR 1,5 HP - 3 HP
17	4405011112	JUNTA MECANICA D-15	27	* 4405011204	TAPA TRASERA MOTOR C71 (1/3-1,25HP)
18	4405010160	JUNTA BRIDA MOTOR	27	* 4405011131	TAPA TRASERA MOTOR C.71 (1,5-3 HP II)
19	4405011113	BRIDA CIERRE MECANICO	27	* 4405011132	TAPA TRASERA MOTOR C.80 (1,5-3 HP III)
20	4405011116	TORNILLOS UNION MOTOR	28	* 4405011210	CONDENSADOR 12 UF (½ HP)
21	* 4405011114	BRIDA MOTOR (0,5 - 1 HP)	28	* 4405011211	CONDENSADOR 20 UF (¾ - 1 HP LL)
21	* 4405011115	BRIDA MOTOR (1,5 - 3 HP)	28	* 4405011212	CONDENSADOR 25 UF (2 HP LL)
22	* 4405010163	ARANDELA DEFLECTORA C,71 1/2-1 HP	28	* 4405011123	CONDENSADOR 35 UF (3 HP)
22	* 4405010164	ARANDELA DEFLECTORA C,80 1,5-3 HP	29	* 4405011213	CJTO. CAJA BORNES II
23	* 4405010158	V-RINGS 0,5 HP - 1 HP	29	* 4405011122	CJTO. CAJA BORNES III
23	* 4405010159	V-RINGS 1,5 HP - 3 HP	30	* 4405011209	CJTO. VENTILADOR+TAPA (1/3 - 1,25 HP)
24	* 4405011124	TAPA DELANTERA MOTOR (0,5 - 1 HP)	30	* 4405011120	TAPA VENTILADOR + VENTILDOR (1,5 - 3 HI
24	* 4405011118	TAPA DELANTERA MOTOR (1,5 - 3 HP II)	30	* 4405010851	CJTO. TAPA VENTILADOR
24	* 4405011119	TAPA DELANTERA MOTOR C-80 (1,5 - 3 HP			

CODIGO **41597, 41598, 41599, 41600, 41601, 41602, 41603, 41604, 41605, 41606**

DESCRIPCION: **BOMBA ASTRAL ALASKA MAX**

OBSERVACIONES

POS	CODIGO	OBSERVACIONES
7	* 4405012005	PARA: 41597, 41598, 41599, 41600
7	* 4405012007	PARA: 41601, 41602, 41603, 41604, 41605, 41606
11	* 4405010112	PARA: 41597, 41598, 41599, 41600
11	* 4405010113	PARA: 41601, 41602, 41603, 41604, 41605, 41606
13	* 4405010115	PARA: 41597, 41598
13	* 4405010116	PARA: 41599, 41600, 41601, 41602, 41603, 41604
13	* 4405010117	PARA: 41605, 41606
15	* 4405010591	PARA: 41597 50 HZ
15	* 4405010667	PARA: 41597 60 HZ
15	* 4405010593	PARA: 41598 50 HZ
15	* 4405010669	PARA: 41598 60 HZ
15	* 4405010595	PARA: 41599 50 HZ
15	* 4405010671	PARA: 41599 60 HZ
15	* 4405010596	PARA: 41600 50 HZ
15	* 4405010672	PARA: 41600 60 HZ
15	* 4405010597	PARA: 41601 50 HZ
15	* 4405010673	PARA: 41601 60 HZ
15	* 4405010598	PARA: 41602 50 HZ
15	* 4405010674	PARA: 41602 60 HZ
15	* 4405010599	PARA: 41603 50 HZ
15	* 4405010675	PARA: 41603 60 HZ
15	* 4405010600	PARA: 41604 50 HZ
15	* 4405010676	PARA: 41604 60 HZ
15	* 4405010601	PARA: 41605 50 HZ
15	* 4405010677	PARA: 41605 60 HZ
15	* 4405010602	PARA: 41606 50 HZ
15	* 4405010678	PARA: 41606 60 HZ
21	* 4405011114	PARA: 41597, 41598, 41599, 41600
21	* 4405011115	PARA: 41601, 41602, 41603, 41604, 41605, 41606
22	* 4405010163	PARA: 41597, 41598, 41599, 41600
22	* 4405010164	PARA: 41601, 41602, 41603, 41604, 41605, 41606
23	* 4405010158	PARA: 41597, 41598, 41599, 41600
23	* 4405010159	PARA: 41601, 41602, 41603, 41604, 41605, 41606
24	* 4405011124	PARA: 41597, 41598, 41599, 41600
24	* 4405011118	PARA: 41601, 41603, 41605
24	* 4405011119	PARA: 41602, 41604, 41606
25	* 4405011206	PARA: 41597, 41598, 41600
25	* 4405011125	PARA: 41599
25	* 4405011126	PARA: 41601, 41602
25	* 4405011127	PARA: 41603
25	* 4405011128	PARA: 41604
25	* 4405011129	PARA: 41605
25	* 4405011130	PARA: 41606

CODIGO **41597, 41598, 41599, 41600, 41601, 41602, 41603, 41604, 41605, 41606**

DESCRIPCION: **BOMBA ASTRAL ALASKA MAX**

26	* 4405010135	PARA: 41597, 41598, 41599, 41600
26	* 4405010136	PARA: 41601, 41602, 41603, 41604, 41605, 41606
27	* 4405011204	PARA: 41597, 41598, 41599, 41600
27	* 4405011131	PARA: 41601, 41603, 41605
27	* 4405011132	PARA: 41602, 41604, 41606
28	* 4405011210	PARA: 41597
28	* 4405011211	PARA: 41598, 41599, 41601
28	* 4405011212	PARA: 41603
28	* 4405011123	PARA: 41605
29	* 4405011213	PARA: 41597, 41598, 41599, 41601, 41603, 41605
29	* 4405011122	PARA: 41600, 41602, 41604, 41606
30	* 4405011209	PARA: 41597, 41598, 41599, 41600
30	* 4405011120	PARA: 41601, 41603, 41605
30	* 4405010851	PARA: 41602, 41604, 41606

CODE **41597, 41598, 41599, 41600, 41601, 41602, 41603, 41604, 41605, 41606**

DESCRIPTION: **POMPE ASTRAL ALASKA MAX**

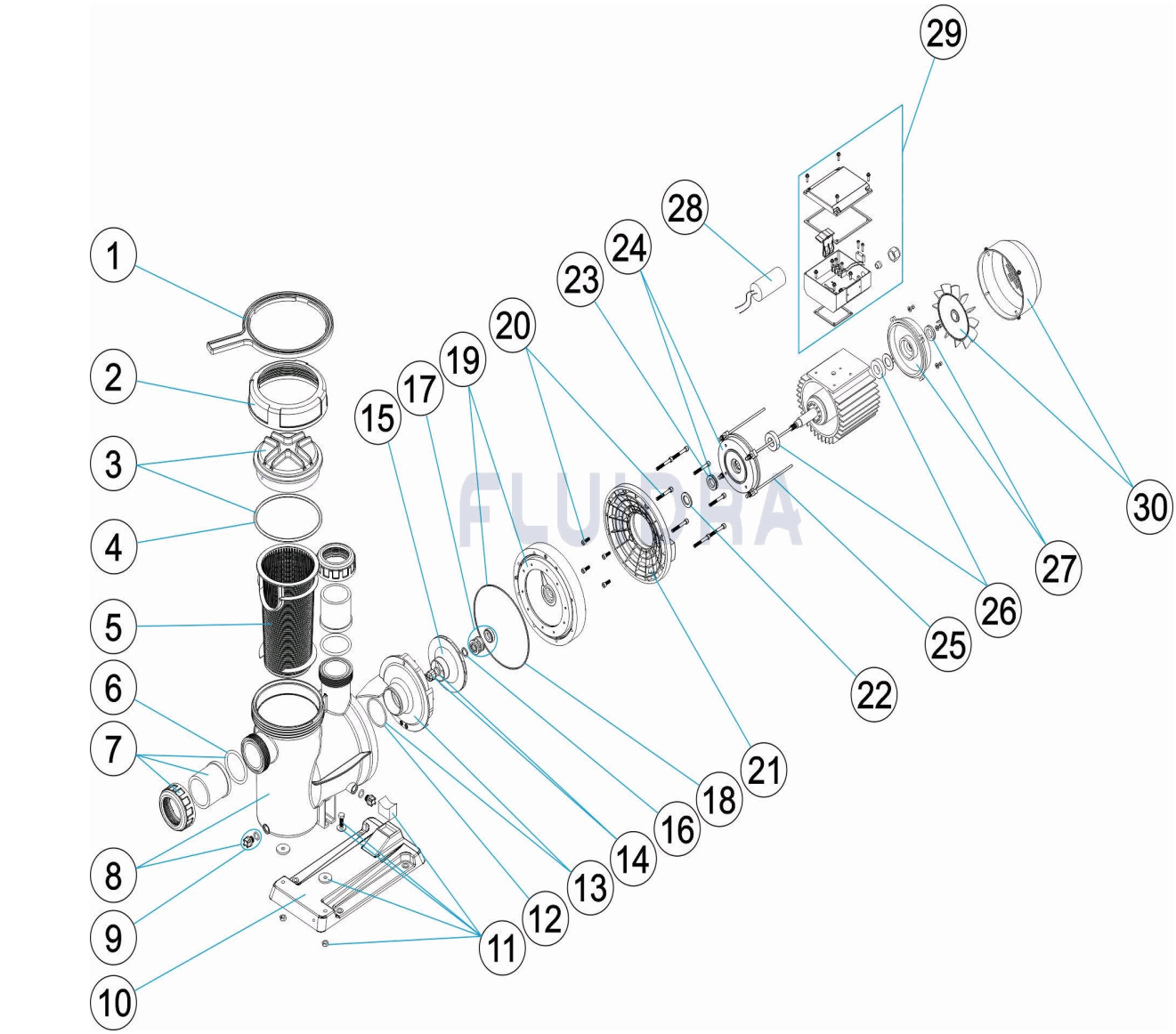

FRANCAIS

POS	CODE	DESCRIPTION QUANTITE	POS	CODE	DESCRIPTION QUANTITE
1	4405011101	CLE ECROU	13	* 4405010116	DIFFUSEUR 1 HP - 2 HP
2	4405011102	ECROU DE COUVERCLE	13	* 4405010117	DIFFUSEUR 2,5 - 3 HP
3	4405010702	COUVERCLE PRÉFILTRE	14	4405010134	BOUCHON BOUT AXE M8 IZQ.
4	4405010178	JOINT TORIQUE D 151,7X6,99	15	* 4405010591	TURBINE ½ (II) HP
5	4405011103	PANIER PRÉFILTER	15	* 4405010667	TURBINE ½ (II) HP 60 HZ
6	4405010773	JOINT TORIQUE MANCHON	15	* 4405010593	TURBINE ¾ (II) HP
7	* 4405012005	RACCORDS UNION D 50	15	* 4405010669	TURBINE ¾ (II) HP 60 HZ
7	* 4405012007	RACCORDS UNION D 63	15	* 4405010595	TURBINE 1 (II) HP
8	4405011106	CORPS POMPE	15	* 4405010671	TURBINE 1 (II) HP 60 HZ
9	4404121107	BOUCHON 1/4' DE VANNE	15	* 4405010596	TURBINE 1 (III) HP
10	4405011107	SOCLE POMPE	15	* 4405010672	TURBINE 1 (III) HP 60 HZ
11	* 4405010112	RACCORD HYDRAULIQUE DE PIED 0,75 - 1	15	* 4405010597	TURBINE 1,5 (II) HP
11	* 4405010113	RACCORD HYDRAULIQUE DE PIED 1,5 HP	15	* 4405010673	TURBINE 1,5 (II) HP 60 HZ

*** VOIR FICHE D'OBSERVATIONS**

CODE **41597, 41598, 41599, 41600, 41601, 41602, 41603, 41604, 41605, 41606**

DESCRIPTION: **POMPE ASTRAL ALASKA MAX**

12	4405010161	JOINT TORIQUE D 56,7X3,5	15	* 4405010598	TURBINE 1,5 (III) HP
13	* 4405010115	DIFFUSEUR <=0,75 HP	15	* 4405010674	TURBINE 1,5 (III) HP 60 HZ
15	* 4405010599	TURBINE 2 (II) HP	25	* 4405011206	TIRANTS D'ACCOUPLEMENT MOTEUR (0,5
15	* 4405010675	TURBINE 2 (II) HP 60 HZ	25	* 4405011125	TIRANTS D'ACCOUPLEMENT MOTEUR (1 H
15	* 4405010600	TURBINE 2 (III) HP	25	* 4405011126	TIRANTS D'ACCOUPLEMENT MOTEUR (1,5
15	* 4405010676	TURBINE 2 (III) HP 60 HZ	25	* 4405011127	TIRANTS D'ACCOUPLEMENT MOTEUR (1,5
15	* 4405010601	TURBINE 3 (II) HP	25	* 4405011128	TIRANTS D'ACCOUPLEMENT MOTEUR (2 H
15	* 4405010677	TURBINE 3 (II) HP 60 HZ	25	* 4405011129	TIRANTS D'ACCOUPLEMENT MOTEUR (3 H
15	* 4405010602	TURBINE 3 (III) HP	25	* 4405011130	TIRANTS D'ACCOUPLEMENT MOTEUR (3 H
15	* 4405010678	TURBINE 3 (III) HP 60 HZ	26	* 4405010135	ROULEMENT MOTEUR < 1 HP
16	4405010162	JOINT RAMASSE GOUTTES (1/2-3/4-1-1,5-2	26	* 4405010136	ROULEMENT MOTEUR 1,5 HP - 3 HP
17	4405011112	GARNITURE MÉCANIQUE D-15	27	* 4405011204	COUVERCLE ARRIÈRE MOTEUR C71 (1/3-1
18	4405010160	JOINT FLASQUE ACCOUP. MOTEUR	27	* 4405011131	COUVERCLE ARRIÈRE MOTEUR (1,5-3 HP I
19	4405011113	BRIDA GARNITURE MÉCANIQUE	27	* 4405011132	COUVERCLE ARRIÈRE MOTEUR (1,5-3 HP I
20	4405011116	VIS MOTEUR	28	* 4405011210	CONDENSATEUR 12 UF (1/2 HP)
21	* 4405011114	FLASQUE ACCOUP. MOTEUR (0,5 -1 HP)	28	* 4405011211	CONDENSATEUR 20 UF (3/4 - 1 HP LL)
21	* 4405011115	FLASQUE ACCOUP. MOTEUR (1,5 - 3 HP)	28	* 4405011212	CONDENSATEUR 25 UF (2 HP LL)
22	* 4405010163	JOINT RAMASSE GOUTTES C.71 1/2-1 HP	28	* 4405011123	CONDENSATEUR 35 UF (3 HP)
22	* 4405010164	JOINT RAMASSE GOUTTES C.80 1,5-3 HP	29	* 4405011213	ENSEMBLE BOITIER CONNEXION II
23	* 4405010158	V-RINGS 0,5 HP - 1 HP	29	* 4405011122	ENSEMBLE BOITIER CONNEXION III
23	* 4405010159	V-RINGS 1,5 HP - 3 HP	30	* 4405011209	ENSEMBLE VENTILATEUR + COUVERCLE (
24	* 4405011124	COUVERCLE AXE MOTEUR (0,5 - 1 HP)	30	* 4405011120	CAPOT VENTILATEUR + VENTILATEUR (1,5
24	* 4405011118	COUVERCLE AXE MOTEUR (1,5 - 3 HP II)	30	* 4405010851	CAPOT VENTILATEUR + VENTILATEUR
24	* 4405011119	COUVERCLE AXE MOTEUR C-80 (1,5 - 3 HF			

CODE **41597, 41598, 41599, 41600, 41601, 41602, 41603, 41604, 41605, 41606**

DESCRIPTION: **POMPE ASTRAL ALASKA MAX**

OBSERVATIONS

POS	CODE	OBSERVATIONS
7	* 4405012005	POUR: 41597, 41598, 41599, 41600
7	* 4405012007	POUR: 41601, 41602, 41603, 41604, 41605, 41606
11	* 4405010112	POUR: 41597, 41598, 41599, 41600
11	* 4405010113	POUR: 41601, 41602, 41603, 41604, 41605, 41606
13	* 4405010115	POUR: 41597, 41598
13	* 4405010116	POUR: 41599, 41600, 41601, 41602, 41603, 41604
13	* 4405010117	POUR: 41605, 41606
15	* 4405010591	POUR: 41597 50 HZ
15	* 4405010667	POUR: 41597 60 HZ
15	* 4405010593	POUR: 41598 50 HZ
15	* 4405010669	POUR: 41598 60 HZ
15	* 4405010595	POUR: 41599 50 HZ
15	* 4405010671	POUR: 41599 60 HZ
15	* 4405010596	POUR: 41600 50 HZ
15	* 4405010672	POUR: 41600 60 HZ
15	* 4405010597	POUR: 41601 50 HZ
15	* 4405010673	POUR: 41601 60 HZ
15	* 4405010598	POUR: 41602 50 HZ
15	* 4405010674	POUR: 41602 60 HZ
15	* 4405010599	POUR: 41603 50 HZ
15	* 4405010675	POUR: 41603 60 HZ
15	* 4405010600	POUR: 41604 50 HZ
15	* 4405010676	POUR: 41604 60 HZ
15	* 4405010601	POUR: 41605 50 HZ
15	* 4405010677	POUR: 41605 60 HZ
15	* 4405010602	POUR: 41606 50 HZ
15	* 4405010678	POUR: 41606 60 HZ
21	* 4405011114	POUR: 41597, 41598, 41599, 41600
21	* 4405011115	POUR: 41601, 41602, 41603, 41604, 41605, 41606
22	* 4405010163	POUR: 41597, 41598, 41599, 41600
22	* 4405010164	POUR: 41601, 41602, 41603, 41604, 41605, 41606
23	* 4405010158	POUR: 41597, 41598, 41599, 41600
23	* 4405010159	POUR: 41601, 41602, 41603, 41604, 41605, 41606
24	* 4405011124	POUR: 41597, 41598, 41599, 41600
24	* 4405011118	POUR: 41601, 41603, 41605
24	* 4405011119	POUR: 41602, 41604, 41606
25	* 4405011206	POUR: 41597, 41598, 41600
25	* 4405011125	POUR: 41599
25	* 4405011126	POUR: 41601, 41602
25	* 4405011127	POUR: 41603
25	* 4405011128	POUR: 41604
25	* 4405011129	POUR: 41605
25	* 4405011130	POUR: 41606

CODE **41597, 41598, 41599, 41600, 41601, 41602, 41603, 41604, 41605, 41606**

DESCRIPTION: **POMPE ASTRAL ALASKA MAX**

26	* 4405010135	POUR: 41597, 41598, 41599, 41600
26	* 4405010136	POUR: 41601, 41602, 41603, 41604, 41605, 41606
27	* 4405011204	POUR: 41597, 41598, 41599, 41600
27	* 4405011131	POUR: 41601, 41603, 41605
27	* 4405011132	POUR: 41602, 41604, 41606
28	* 4405011210	POUR: 41597
28	* 4405011211	POUR: 41598, 41599, 41601
28	* 4405011212	POUR: 41603
28	* 4405011123	POUR: 41605
29	* 4405011213	POUR: 41597, 41598, 41599, 41601, 41603, 41605
29	* 4405011122	POUR: 41600, 41602, 41604, 41606
30	* 4405011209	POUR: 41597, 41598, 41599, 41600
30	* 4405011120	POUR: 41601, 41603, 41605
30	* 4405010851	POUR: 41602, 41604, 41606

ASTRALPOOL

PARTS BREAKDOWN

REV.: **6** **480**
DATE: **22/12/2021**
SHEET: **1/4**

CODE **41597, 41598, 41599, 41600, 41601, 41602, 41603, 41604, 41605, 41606**

DESCRIPTION: **ASTRAL ALASKA MAX PUMP**

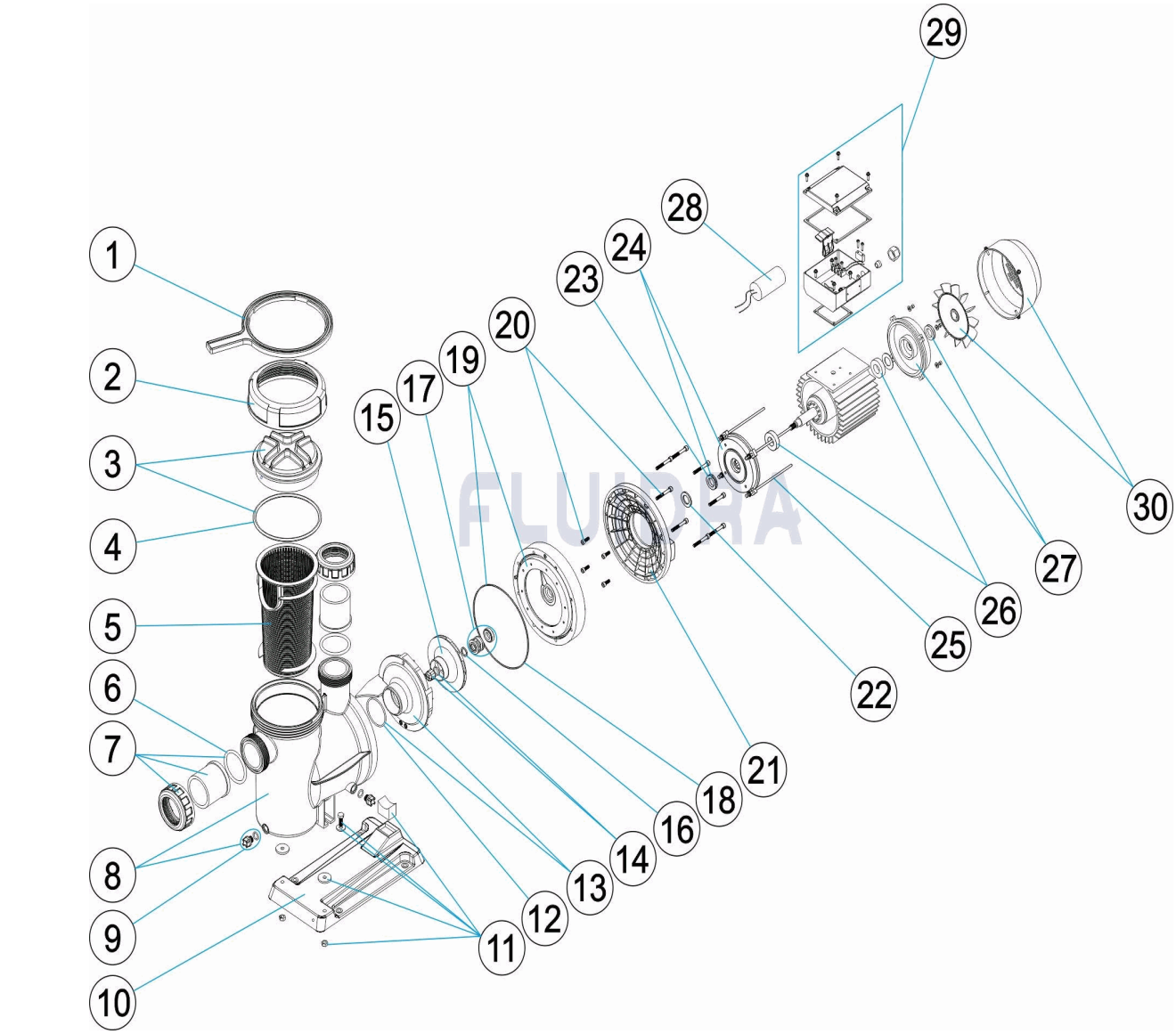

ENGLISH

POS	CODE	DESCRIPTION QUANTITY	POS	CODE	DESCRIPTION QUANTITY
1	4405011101	KEY FOR PREFILTER NUT	13	* 4405010116	DIFFUSOR 1 HP - 2 HP
2	4405011102	THREADED LID COLLAR	13	* 4405010117	DIFFUSOR 2,5 - 3 HP
3	4405010702	PRE-FILTER COVER	14	4405010134	IMPELLER COVER M8 LEFT
4	4405010178	O' RING D 151,7X6,99	15	* 4405010591	IMPELLER ½ (II) HP
5	4405011103	PRE-FILTER BASKET	15	* 4405010667	IMPELLER ½ (II) HP 60 HZ
6	4405010773	SOCKET O'RING	15	* 4405010593	IMPELLER ¾ (II) HP
7	* 4405012005	UNION FITTINGS D 50	15	* 4405010669	IMPELLER ¾ (II) HP 60 HZ
7	* 4405012007	UNION FITTINGS D 63	15	* 4405010595	IMPELLER 1 (II) HP
8	4405011106	PUMP HOUSING	15	* 4405010671	IMPELLER 1 (II) HP 60 HZ
9	4404121107	PLUG 1/4'	15	* 4405010596	IMPELLER 1 (III) HP
10	4405011107	PUMP BASE	15	* 4405010672	IMPELLER 1 (III) HP 60 HZ
11	* 4405010112	PUMP BASE FITTINGS 0,75 - 1,5 HP	15	* 4405010597	IMPELLER 1,5 (II) HP
11	* 4405010113	PUMP BASE FITTINGS 1,5 HP - 3 HP	15	* 4405010673	IMPELLER 1,5 (II) HP 60 HZ

*** SEE OBSERVATIONS SHEET**

CODE **41597, 41598, 41599, 41600, 41601, 41602, 41603, 41604, 41605, 41606**

DESCRIPTION: **ASTRAL ALASKA MAX PUMP**

12	4405010161	O' RING D. 56,7X3,5	15	* 4405010598	IMPELLER 1,5 (III) HP
13	* 4405010115	DIFFUSEUR <=0,75 HP	15	* 4405010674	IMPELLER 1,5 (III) HP 60 HZ
15	* 4405010599	IMPELLER 2 (II) HP	25	* 4405011206	MOTOR TIES (0,5 - 0,75 HP LL 1 HP III)
15	* 4405010675	IMPELLER 2 (II) HP 60 HZ	25	* 4405011125	MOTOR TIES (1 HP LL)
15	* 4405010600	IMPELLER 2 (III) HP	25	* 4405011126	MOTOR TIES (1,5 - 2 HP LL)
15	* 4405010676	IMPELLER 2 (III) HP 60 HZ	25	* 4405011127	MOTOR TIES (1,5 HP LLI)
15	* 4405010601	IMPELLER 3 (II) HP	25	* 4405011128	MOTOR TIES (2 HP LLI)
15	* 4405010677	IMPELLER 3 (II) HP 60 HZ	25	* 4405011129	MOTOR TIES (3 HP LL)
15	* 4405010602	IMPELLER 3 (III) HP	25	* 4405011130	MOTOR TIES (3 HP LLI)
15	* 4405010678	IMPELLER 3 (III) HP 60 HZ	26	* 4405010135	MOTOR BEARINGS < 1 HP
16	4405010162	DEFLECTOR WASHER (1/2-3/4-1-1,5-2 HP)	26	* 4405010136	MOTOR BEARINGS 1,5 HP - 3 HP
17	4405011112	MECHANICAL SEAL D-15	27	* 4405011204	REAR MOTOR COVER C71 (1/3-1,25HP)
18	4405010160	MOTOR CLAMP GASKET	27	* 4405011131	REAR MOTOR COVER (1,5-3 HP II)
19	4405011113	FLANGE MECANICAL SEAL	27	* 4405011132	REAR MOTOR COVER (1,5-3 HPIII)
20	4405011116	MOTOR SCREW	28	* 4405011210	CONDENSER 12 UF (1/2 HP)
21	* 4405011114	MOTOR CLAMP (0,5 - 1 HP)	28	* 4405011211	CONDENSER 20 UF (3/4 - 1 HP LL)
21	* 4405011115	MOTOR CLAMP (1,5 - 3 HP)	28	* 4405011212	CONDENSER 25 UF (2 HP LL)
22	* 4405010163	DEFLECTOR WASHER C.71 1/2-1 HP	28	* 4405011123	CONDENSER 35 UF (3 HP)
22	* 4405010164	DEFLECTOR WASHER C.80 1,5-3 HP	29	* 4405011213	TERMINAL BOX ASSEMBLY II
23	* 4405010158	V-RINGS 0,5 HP - 1 HP	29	* 4405011122	TERMINAL BOX ASSEMBLY III
23	* 4405010159	V-RINGS 1,5 HP - 3 HP	30	* 4405011209	FAN COVER ASSEMBLY FAN COVER ASSEI
24	* 4405011124	FRONT MOTOR COVER (0,5 - 1 HP)	30	* 4405011120	FAN COVER + FAN (1,5 - 3 HP II)
24	* 4405011118	FRONT MOTOR COVER (1,5 - 3 HP II)	30	* 4405010851	FAN COVER + FAN
24	* 4405011119	FRONT MOTOR COVER C-80 (1,5 - 3 HP III)			

CODE **41597, 41598, 41599, 41600, 41601, 41602, 41603, 41604, 41605, 41606**

DESCRIPTION: **ASTRAL ALASKA MAX PUMP**

OBSERVATIONS

POS	CODE	OBSERVATIONS
7	* 4405012005	FOR: 41597, 41598, 41599, 41600
7	* 4405012007	FOR: 41601, 41602, 41603, 41604, 41605, 41606
11	* 4405010112	FOR: 41597, 41598, 41599, 41600
11	* 4405010113	FOR: 41601, 41602, 41603, 41604, 41605, 41606
13	* 4405010115	FOR: 41597, 41598
13	* 4405010116	FOR: 41599, 41600, 41601, 41602, 41603, 41604
13	* 4405010117	FOR: 41605, 41606
15	* 4405010591	FOR: 41597 50 HZ
15	* 4405010667	FOR: 41597 60 HZ
15	* 4405010593	FOR: 41598 50 HZ
15	* 4405010669	FOR: 41598 60 HZ
15	* 4405010595	FOR: 41599 50 HZ
15	* 4405010671	FOR: 41599 60 HZ
15	* 4405010596	FOR: 41600 50 HZ
15	* 4405010672	FOR: 41600 60 HZ
15	* 4405010597	FOR: 41601 50 HZ
15	* 4405010673	FOR: 41601 60 HZ
15	* 4405010598	FOR: 41602 50 HZ
15	* 4405010674	FOR: 41602 60 HZ
15	* 4405010599	FOR: 41603 50 HZ
15	* 4405010675	FOR: 41603 60 HZ
15	* 4405010600	FOR: 41604 50 HZ
15	* 4405010676	FOR: 41604 60 HZ
15	* 4405010601	FOR: 41605 50 HZ
15	* 4405010677	FOR: 41605 60 HZ
15	* 4405010602	FOR: 41606 50 HZ
15	* 4405010678	FOR: 41606 60 HZ
21	* 4405011114	FOR: 41597, 41598, 41599, 41600
21	* 4405011115	FOR: 41601, 41602, 41603, 41604, 41605, 41606
22	* 4405010163	FOR: 41597, 41598, 41599, 41600
22	* 4405010164	FOR: 41601, 41602, 41603, 41604, 41605, 41606
23	* 4405010158	FOR: 41597, 41598, 41599, 41600
23	* 4405010159	FOR: 41601, 41602, 41603, 41604, 41605, 41606
24	* 4405011124	FOR: 41597, 41598, 41599, 41600
24	* 4405011118	FOR: 41601, 41603, 41605
24	* 4405011119	FOR: 41602, 41604, 41606
25	* 4405011206	FOR: 41597, 41598, 41600
25	* 4405011125	FOR: 41599
25	* 4405011126	FOR: 41601, 41602
25	* 4405011127	FOR: 41603
25	* 4405011128	FOR: 41604
25	* 4405011129	FOR: 41605
25	* 4405011130	FOR: 41606

CODE **41597, 41598, 41599, 41600, 41601, 41602, 41603, 41604, 41605, 41606**

DESCRIPTION: **ASTRAL ALASKA MAX PUMP**

26	* 4405010135	FOR: 41597, 41598, 41599, 41600
26	* 4405010136	FOR: 41601, 41602, 41603, 41604, 41605, 41606
27	* 4405011204	FOR: 41597, 41598, 41599, 41600
27	* 4405011131	FOR: 41601, 41603, 41605
27	* 4405011132	FOR: 41602, 41604, 41606
28	* 4405011210	FOR: 41597
28	* 4405011211	FOR: 41598, 41599, 41601
28	* 4405011212	FOR: 41603
28	* 4405011123	FOR: 41605
29	* 4405011213	FOR: 41597, 41598, 41599, 41601, 41603, 41605
29	* 4405011122	FOR: 41600, 41602, 41604, 41606
30	* 4405011209	FOR: 41597, 41598, 41599, 41600
30	* 4405011120	FOR: 41601, 41603, 41605
30	* 4405010851	FOR: 41602, 41604, 41606

CODICE **41597, 41598, 41599, 41600, 41601, 41602, 41603, 41604, 41605, 41606**

DESCRIZIONE: **POMPA ASTRAL ALASKA MAX**

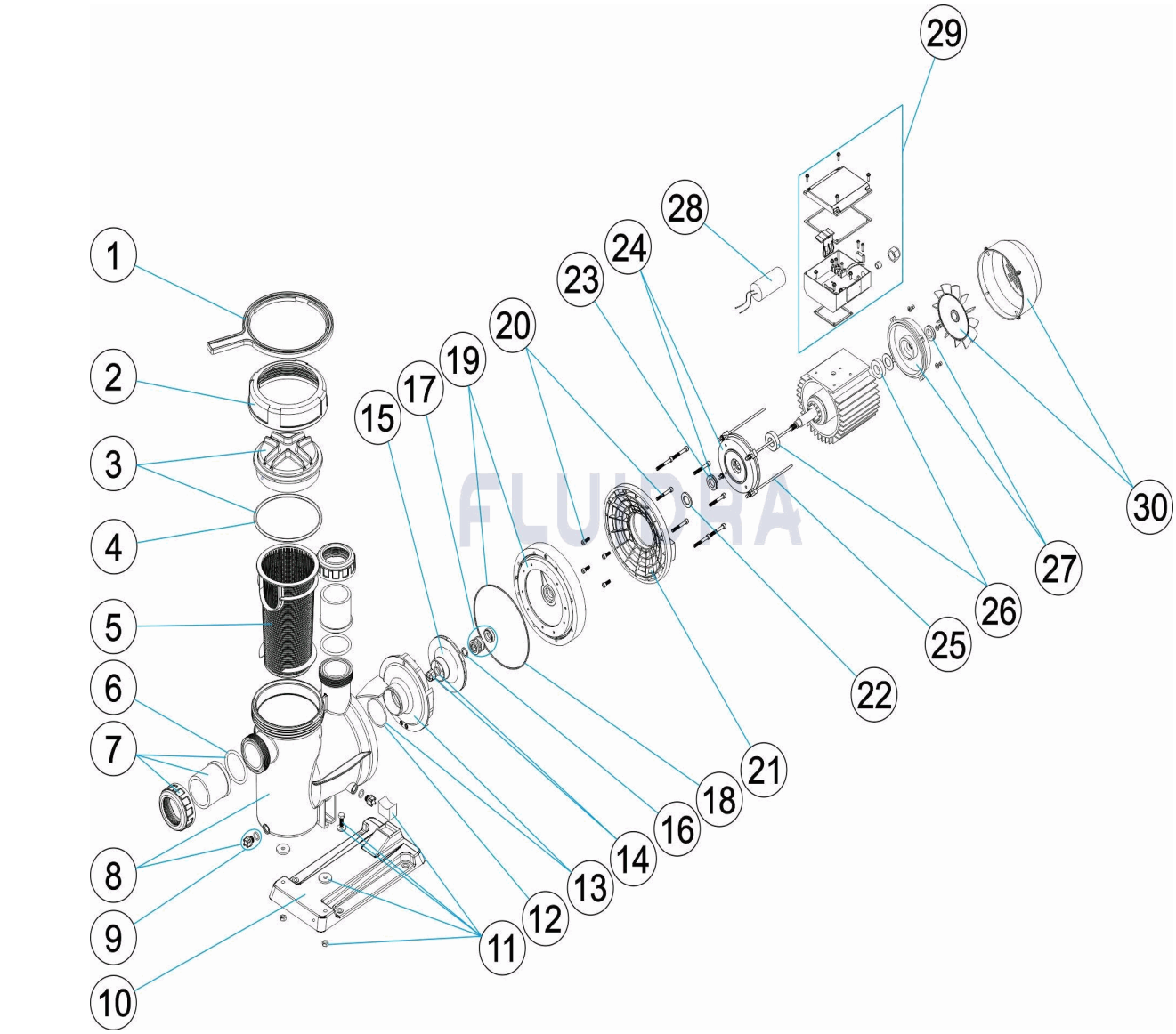

ITALIANO

POS	CODICE	DESCRIZIONE	QUANTITA'	POS	CODICE	DESCRIZIONE	QUANTITA'
1	4405011101	CHIAVE GHIERA		13	* 4405010116	DIFFUSORE 1 HP - 2 HP	
2	4405011102	GHIERA COPERCHIO		13	* 4405010117	DIFFUSORE 2,5 - 3 HP	
3	4405010702	COPERCHIO PREFILTRO		14	4405010134	TAPPO RUOTA M8 SIN.	
4	4405010178	O-RING D 151,7X6,99		15	* 4405010591	RUOTA ½ (II) HP	
5	4405011103	CESTO PREFILTRO		15	* 4405010667	RUOTA ½ (II) HP 60 HZ	
6	4405010773	O-RING MANICOTTO		15	* 4405010593	RUOTA ¾ (II) HP	
7	* 4405012005	MANICOTTI DI UNIONE D 50		15	* 4405010669	RUOTA ¾ (II) HP 60 HZ	
7	* 4405012007	MANICOTTI DI UNIONE D 63		15	* 4405010595	RUOTA 1 (II) HP	
8	4405011106	CORPO BOMBA		15	* 4405010671	RUOTA 1 (II) HP 60 HZ	
9	4404121107	COPERCHIO 1/4' VALVOLA		15	* 4405010596	RUOTA 1 (III) HP	
10	4405011107	PIEDE POMPA		15	* 4405010672	RUOTA 1 (III) HP 60 HZ	
11	* 4405010112	UNIONE PARTE HIDRAULICA-BASE 0,75 -		15	* 4405010597	RUOTA 1,5 (II) HP	
11	* 4405010113	UNIONE PARTE HIDRAULICA-BASE 1,5 HP		15	* 4405010673	RUOTA 1,5 (II) HP 60 HZ	

*** SI FACCIA RIFERIMENTO AL FOGLIO DELLE OSSERVAZIONI**

CODICE **41597, 41598, 41599, 41600, 41601, 41602, 41603, 41604, 41605, 41606**

DESCRIZIONE: **POMPA ASTRAL ALASKA MAX**

12	4405010161	O-RING D 56,7X3,5	15	* 4405010598	RUOTA 1,5 (III) HP
13	* 4405010115	DIFFUSORE <=0,75 HP	15	* 4405010674	RUOTA 1,5 (III) HP 60 HZ
15	* 4405010599	RUOTA 2 (II) HP	25	* 4405011206	ASTAS MOTORE (0,5 - 0,75 HP LL 1 HP III)
15	* 4405010675	RUOTA 2 (II) HP 60 HZ	25	* 4405011125	ASTAS MOTORE (1 HP LL)
15	* 4405010600	RUOTA 2 (III) HP	25	* 4405011126	ASTAS MOTORE (1,5 - 2 HP LL)
15	* 4405010676	RUOTA 2 (III) HP 60 HZ	25	* 4405011127	ASTAS MOTORE (1,5 HP LLI)
15	* 4405010601	RUOTA 3 (II) HP	25	* 4405011128	ASTAS MOTORE (2 HP LLI)
15	* 4405010677	RUOTA 3 (II) HP 60 HZ	25	* 4405011129	ASTAS MOTORE (3 HP LL)
15	* 4405010602	RUOTA 3 (III) HP	25	* 4405011130	ASTAS MOTORE (3 HP LLI)
15	* 4405010678	RUOTA 3 (III) HP 60 HZ	26	* 4405010135	CUSCINETTO MOTORE < 1 HP
16	4405010162	RONDELLA DEFLETTRICE (1/2-3/4-1-1,5-2 H	26	* 4405010136	CUSCINETTO MOTORE 1,5 HP - 3 HP
17	4405011112	GUARNIZIONE MECCANICA D-15	27	* 4405011204	COPERCHIO POSTERIORE MOTORE C71 (
18	4405010160	GUARNIZIONE FLANGIA MOTORE	27	* 4405011131	COPERCHIO POSTERIORE MOTORE (1,5-3
19	4405011113	BRIDA TENUTA MECANICA	27	* 4405011132	COPERCHIO POSTERIORE MOTORE (1,5-3
20	4405011116	VITE MOTORE	28	* 4405011210	CONDENSATORE 12 UF (1/2 HP)
21	* 4405011114	FLANGIA MOTORE (0,5 -1 HP)	28	* 4405011211	CONDENSATORE 20 UF (3/4 - 1 HP LL)
21	* 4405011115	FLANGIA MOTORE (1,5 - 3 HP)	28	* 4405011212	CONDENSATORE 25 UF (2 HP LL)
22	* 4405010163	RONDELLA DEFLETTRICE C,71 1/2-1 HP	28	* 4405011123	CONDENSATORE 35 UF (3 HP)
22	* 4405010164	RONDELLA DEFLETTRICE C.80 1,5-3 HP	29	* 4405011213	GRUPPO MORSETTIERA II
23	* 4405010158	V-RINGS 0,5 HP - 1 HP	29	* 4405011122	GRUPPO MORSETTIERA III
23	* 4405010159	V-RINGS 1,5 HP - 3 HP	30	* 4405011209	GRUPPO VENTILATORE + COPERCHIO (1/3
24	* 4405011124	COPERCHIO ANTERIORE MOTORE (0,5 - 1	30	* 4405011120	COPERCHIO VENTILATORE + VENTILATOR
24	* 4405011118	COPERCHIO ANTERIORE MOTORE (1,5 - 3	30	* 4405010851	COPERCHIO VENTILATORE + VENTILATOR
24	* 4405011119	COPERCHIO ANTERIORE MOTORE C-80 (1			

CODICE **41597, 41598, 41599, 41600, 41601, 41602, 41603, 41604, 41605, 41606**

DESCRIZIONE: **POMPA ASTRAL ALASKA MAX**

OSSERVAZIONI

POS	CODICE	OSSERVAZIONI
7	* 4405012005	PER: 41597, 41598, 41599, 41600
7	* 4405012007	PER: 41601, 41602, 41603, 41604, 41605, 41606
11	* 4405010112	PER: 41597, 41598, 41599, 41600
11	* 4405010113	PER: 41601, 41602, 41603, 41604, 41605, 41606
13	* 4405010115	PER: 41597, 41598
13	* 4405010116	PER: 41599, 41600, 41601, 41602, 41603, 41604
13	* 4405010117	PER: 41605, 41606
15	* 4405010591	PER: 41597 50 HZ
15	* 4405010667	PER: 41597 60 HZ
15	* 4405010593	PER: 41598 50 HZ
15	* 4405010669	PER: 41598 60 HZ
15	* 4405010595	PER: 41599 50 HZ
15	* 4405010671	PER: 41599 60 HZ
15	* 4405010596	PER: 41600 50 HZ
15	* 4405010672	PER: 41600 60 HZ
15	* 4405010597	PER: 41601 50 HZ
15	* 4405010673	PER: 41601 60 HZ
15	* 4405010598	PER: 41602 50 HZ
15	* 4405010674	PER: 41602 60 HZ
15	* 4405010599	PER: 41603 50 HZ
15	* 4405010675	PER: 41603 60 HZ
15	* 4405010600	PER: 41604 50 HZ
15	* 4405010676	PER: 41604 60 HZ
15	* 4405010601	PER: 41605 50 HZ
15	* 4405010677	PER: 41605 60 HZ
15	* 4405010602	PER: 41606 50 HZ
15	* 4405010678	PER: 41606 60 HZ
21	* 4405011114	PER: 41597, 41598, 41599, 41600
21	* 4405011115	PER: 41601, 41602, 41603, 41604, 41605, 41606
22	* 4405010163	PER: 41597, 41598, 41599, 41600
22	* 4405010164	PER: 41601, 41602, 41603, 41604, 41605, 41606
23	* 4405010158	PER: 41597, 41598, 41599, 41600
23	* 4405010159	PER: 41601, 41602, 41603, 41604, 41605, 41606
24	* 4405011124	PER: 41597, 41598, 41599, 41600
24	* 4405011118	PER: 41601, 41603, 41605
24	* 4405011119	PER: 41602, 41604, 41606
25	* 4405011206	PER: 41597, 41598, 41600
25	* 4405011125	PER: 41599
25	* 4405011126	PER: 41601, 41602
25	* 4405011127	PER: 41603
25	* 4405011128	PER: 41604
25	* 4405011129	PER: 41605
25	* 4405011130	PER: 41606

CODICE **41597, 41598, 41599, 41600, 41601, 41602, 41603, 41604, 41605, 41606**

DESCRIZIONE: **POMPA ASTRAL ALASKA MAX**

26	* 4405010135	PER: 41597, 41598, 41599, 41600
26	* 4405010136	PER: 41601, 41602, 41603, 41604, 41605, 41606
27	* 4405011204	PER: 41597, 41598, 41599, 41600
27	* 4405011131	PER: 41601, 41603, 41605
27	* 4405011132	PER: 41602, 41604, 41606
28	* 4405011210	PER: 41597
28	* 4405011211	PER: 41598, 41599, 41601
28	* 4405011212	PER: 41603
28	* 4405011123	PER: 41605
29	* 4405011213	PER: 41597, 41598, 41599, 41601, 41603, 41605
29	* 4405011122	PER: 41600, 41602, 41604, 41606
30	* 4405011209	PER: 41597, 41598, 41599, 41600
30	* 4405011120	PER: 41601, 41603, 41605
30	* 4405010851	PER: 41602, 41604, 41606

CODE **41597, 41598, 41599, 41600, 41601, 41602, 41603, 41604, 41605, 41606**

BESCHREIBURG: **PUMPE ASTRAL ALASKA MAX**

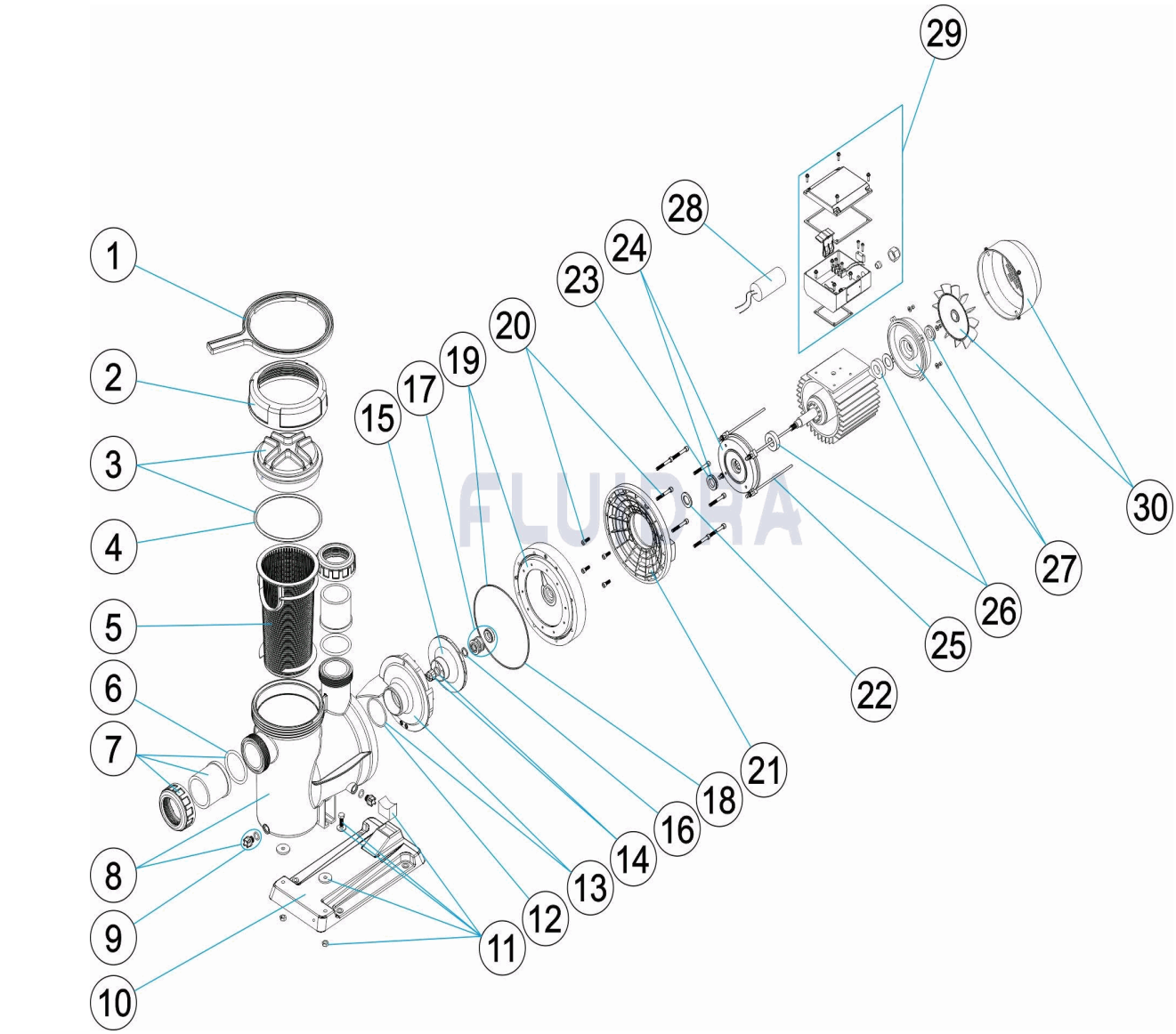

DEUTSCH

POS	CODE	BESCHREIBURG MENGE	POS	CODE	BESCHREIBURG MENGE
1	4405011101	SCHLÜSSEL MUTTER PUMPENDECKEL	13	* 4405010116	WASSERVERTEILER 1 HP - 2 HP
2	4405011102	MUTTER ABDECKUNG	13	* 4405010117	WASSERVERTEILER 2,5 - 3 HP
3	4405010702	VORFILTERDECKEL	14	4405010134	STOPFEN LAUFRAD M8 LINKS
4	4405010178	O-RING D. 151,7 X 6,99	15	* 4405010591	LAUFRAD ½ (II) HP
5	4405011103	VORFILTERKORB	15	* 4405010667	LAUFRAD ½ (II) HP 60 HZ
6	4405010773	O-RING NIPPEL	15	* 4405010593	LAUFRAD ¾ (II) HP
7	* 4405012005	ANSCHLUSSZUBEHÖR D. 50	15	* 4405010669	LAUFRAD ¾ (II) HP 60 HZ
7	* 4405012007	ANSCHLUSSZUBEHÖR D. 63	15	* 4405010595	LAUFRAD 1 (II) HP
8	4405011106	PUMPENGEHÄUSE	15	* 4405010671	LAUFRAD 1 (II) HP 60 HZ
9	4404121107	STOPFEN 1/4' VENTIL	15	* 4405010596	LAUFRAD 1 (III) HP
10	4405011107	PUMPENFUSS	15	* 4405010672	LAUFRAD 1 (III) HP 60 HZ
11	* 4405010112	VERBINDUNG HYDRAULIK-FUSS 0,75 - 1,5	15	* 4405010597	LAUFRAD 1,5 (II) HP
11	* 4405010113	VERBINDUNG HYDRAULIK-FUSS 1,5 HP - 3	15	* 4405010673	LAUFRAD 1,5 (II) HP 60 HZ

*** SIEHE ANMERKUGSBLATT**

CODE **41597, 41598, 41599, 41600, 41601, 41602, 41603, 41604, 41605, 41606**

BESCHREIBURG: **PUMPE ASTRAL ALASKA MAX**

12	4405010161	O-RING D. 56,7 X 3,5	15	* 4405010598	LAUFRAD 1,5 (III) HP
13	* 4405010115	WASSERVERTEILER <=0,75 HP	15	* 4405010674	LAUFRAD 1,5 (III) HP 60 HZ
15	* 4405010599	LAUFRAD 2 (II) HP	25	* 4405011206	RUNDEISEN MOTOR (0,5 - 0,75 HP LL 1 HP I
15	* 4405010675	LAUFRAD 2 (II) HP 60 HZ	25	* 4405011125	RUNDEISEN MOTOR M5 X 185 (1 HP II)
15	* 4405010600	LAUFRAD 2 (III) HP	25	* 4405011126	RUNDEISEN MOTOR M-6 X 185 (1,5 - 2 HP II
15	* 4405010676	LAUFRAD 2 (III) HP 60 HZ	25	* 4405011127	RUNDEISEN MOTOR M-6 X 190 (1,5 HP III)
15	* 4405010601	LAUFRAD 3 (II) HP	25	* 4405011128	RUNDEISEN MOTOR M-6 X 210 (2 HP III)
15	* 4405010677	LAUFRAD 3 (II) HP 60 HZ	25	* 4405011129	RUNDEISEN MOTOR M6 X 220 (3 HP II)
15	* 4405010602	LAUFRAD 3 (III) HP	25	* 4405011130	RUNDEISEN MOTOR M-6 X 240 (3 HP III)
15	* 4405010678	LAUFRAD 3 (III) HP 60 HZ	26	* 4405010135	WÄLZLAGER MOTOR < 1 HP
16	4405010162	DISTANZSCHEIBE (1/2 - 3/4 - 1 - 1,5 - 2 HP)	26	* 4405010136	WÄLZLAGER MOTOR 1,5 HP - 3 HP
17	4405011112	GLEITRINGDICHTUNG D. 15	27	* 4405011204	MOTORDECKEL HINTEN C71 (1/3 - 1,25 HP)
18	4405010160	DICHTUNG MOTORFLANSCH	27	* 4405011131	MOTORDECKEL HINTEN C.71 (1,5 - 3 HP II)
19	4405011113	GLEITRINGDICHTUNG SCHLIESSVORRICH	27	* 4405011132	MOTORDECKEL HINTEN C.80 (1,5 - 3 HP III)
20	4405011116	VERBINDUNGSSCHRAUBEN MOTOR	28	* 4405011210	KONDENSATOR 12 UF (1/2 HP)
21	* 4405011114	MOTORFLANSCH (0,5 - 1 HP)	28	* 4405011211	KONDENSATOR 20 UF (3/4 - 1 HP LL)
21	* 4405011115	MOTORFLANSCH (1,5 - 3 HP)	28	* 4405011212	KONDENSATOR 25 UF (2 HP LL)
22	* 4405010163	BEILAGSCHEIBE C,71 1/2 - 1 HP	28	* 4405011123	KONDENSATOR 35 UF (3 HP)
22	* 4405010164	BEILAGSCHEIBE C,80 1,5 - 3 HP	29	* 4405011213	SET KLEMMSCHRANK II
23	* 4405010158	DICHTUNGSRINGE 0,5 HP - 1 HP	29	* 4405011122	SET KLEMMSCHRANK III
23	* 4405010159	DICHTUNGSRINGE 1,5 HP - 3 HP	30	* 4405011209	SET VENTILATOR MIT ABDECKUNG (1/3 - 1,
24	* 4405011124	MOTORDECKEL VORNE (0,5 - 1 HP)	30	* 4405011120	VENTILATORDECKEL MIT VENTILDOR (1,5 -
24	* 4405011118	MOTORDECKEL VORNE (1,5 - 3 HP II)	30	* 4405010851	SET VENTILATORDECKEL
24	* 4405011119	MOTORDECKEL VORNE C - 80 (1,5 - 3 HP II			

CODE **41597, 41598, 41599, 41600, 41601, 41602, 41603, 41604, 41605, 41606**

BESCHREIBURG: **PUMPE ASTRAL ALASKA MAX**

HINWEISE

POS	CODE	HINWEISE
7	* 4405012005	FÜR: 41597, 41598, 41599, 41600
7	* 4405012007	FÜR: 41601, 41602, 41603, 41604, 41605, 41606
11	* 4405010112	FÜR: 41597, 41598, 41599, 41600
11	* 4405010113	FÜR: 41601, 41602, 41603, 41604, 41605, 41606
13	* 4405010115	FÜR: 41597, 41598
13	* 4405010116	FÜR: 41599, 41600, 41601, 41602, 41603, 41604
13	* 4405010117	FÜR: 41605, 41606
15	* 4405010591	FÜR: 41597 50 HZ
15	* 4405010667	FÜR: 41597 60 HZ
15	* 4405010593	FÜR: 41598 50 HZ
15	* 4405010669	FÜR: 41598 60 HZ
15	* 4405010595	FÜR: 41599 50 HZ
15	* 4405010671	FÜR: 41599 60 HZ
15	* 4405010596	FÜR: 41600 50 HZ
15	* 4405010672	FÜR: 41600 60 HZ
15	* 4405010597	FÜR: 41601 50 HZ
15	* 4405010673	FÜR: 41601 60 HZ
15	* 4405010598	FÜR: 41602 50 HZ
15	* 4405010674	FÜR: 41602 60 HZ
15	* 4405010599	FÜR: 41603 50 HZ
15	* 4405010675	FÜR: 41603 60 HZ
15	* 4405010600	FÜR: 41604 50 HZ
15	* 4405010676	FÜR: 41604 60 HZ
15	* 4405010601	FÜR: 41605 50 HZ
15	* 4405010677	FÜR: 41605 60 HZ
15	* 4405010602	FÜR: 41606 50 HZ
15	* 4405010678	FÜR: 41606 60 HZ
21	* 4405011114	FÜR: 41597, 41598, 41599, 41600
21	* 4405011115	FÜR: 41601, 41602, 41603, 41604, 41605, 41606
22	* 4405010163	FÜR: 41597, 41598, 41599, 41600
22	* 4405010164	FÜR: 41601, 41602, 41603, 41604, 41605, 41606
23	* 4405010158	FÜR: 41597, 41598, 41599, 41600
23	* 4405010159	FÜR: 41601, 41602, 41603, 41604, 41605, 41606
24	* 4405011124	FÜR: 41597, 41598, 41599, 41600
24	* 4405011118	FÜR: 41601, 41603, 41605
24	* 4405011119	FÜR: 41602, 41604, 41606
25	* 4405011206	FÜR: 41597, 41598, 41600
25	* 4405011125	FÜR: 41599
25	* 4405011126	FÜR: 41601, 41602
25	* 4405011127	FÜR: 41603
25	* 4405011128	FÜR: 41604
25	* 4405011129	FÜR: 41605
25	* 4405011130	FÜR: 41606

CODE **41597, 41598, 41599, 41600, 41601, 41602, 41603, 41604, 41605, 41606**

BESCHREIBURG: **PUMPE ASTRAL ALASKA MAX**

26	* 4405010135	FÜR: 41597, 41598, 41599, 41600
26	* 4405010136	FÜR: 41601, 41602, 41603, 41604, 41605, 41606
27	* 4405011204	FÜR: 41597, 41598, 41599, 41600
27	* 4405011131	FÜR: 41601, 41603, 41605
27	* 4405011132	FÜR: 41602, 41604, 41606
28	* 4405011210	FÜR: 41597
28	* 4405011211	FÜR: 41598, 41599, 41601
28	* 4405011212	FÜR: 41603
28	* 4405011123	FÜR: 41605
29	* 4405011213	FÜR: 41597, 41598, 41599, 41601, 41603, 41605
29	* 4405011122	FÜR: 41600, 41602, 41604, 41606
30	* 4405011209	FÜR: 41597, 41598, 41599, 41600
30	* 4405011120	FÜR: 41601, 41603, 41605
30	* 4405010851	FÜR: 41602, 41604, 41606

CODIGO **41597, 41598, 41599, 41600, 41601, 41602, 41603, 41604, 41605, 41606**

DESCRICÃO: **BOMBA ASTRAL ALASKA MAX**

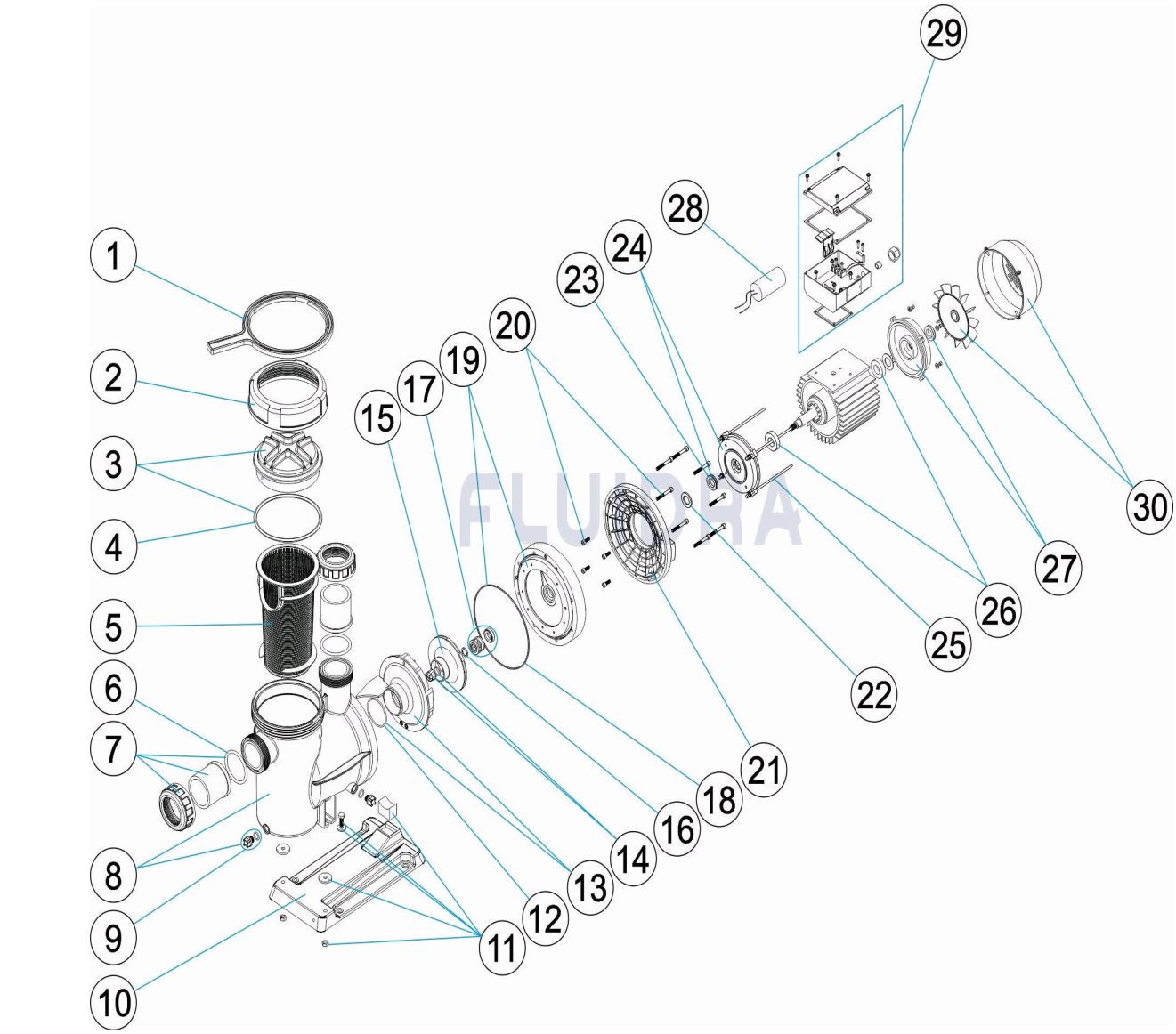

PORTUGUES

POS	CODIGO	DESCRICÃO JANTIDADE	POS	CODIGO	DESCRICÃO JANTIDADE
1	4405011101	CHAVE PORCA	13	* 4405010116	DIFUSOR 1 HP - 2 HP
2	4405011102	PORCA TAMPA	13	* 4405010117	DIFUSOR 2,5 - 3 HP
3	4405010702	TAMPA PRÉ-FILTRO	14	4405010134	TAMPO RODIZIO M8 ESQ.
4	4405010178	JUNTA TÓRICA D 151,7X6,99	15	* 4405010591	RODÍZIO ½ (II) HP
5	4405011103	CESTO PRÉ-FILTRO	15	* 4405010667	RODÍZIO ½ (II) HP
6	4405010773	JUNTA DE UNIÃO	15	* 4405010593	RODÍZIO ¾ (II) HP
7	* 4405012005	ACESSÓRIOS DE UNIÃO D 50	15	* 4405010669	RODÍZIO ¾ (II) HP 60 HZ
7	* 4405012007	ACESSÓRIOS DE UNIÃO D 63	15	* 4405010595	RODÍZIO 1 (II) HP
8	4405011106	CORPO BOMBA	15	* 4405010671	RODÍZIO 1 (II) HP 60 HZ
9	4404121107	TAMPÃO 1/4' VÁLVULA	15	* 4405010596	RODÍZIO 1 (III) HP
10	4405011107	PÉ BOMBA	15	* 4405010672	RODÍZIO 1 (III) HP 60 HZ
11	* 4405010112	UNIÃO HIDRÁULICA PIE 0,75 - 1,5 HP	15	* 4405010597	RODÍZIO 1,5 (II) HP
11	* 4405010113	UNIÃO HIDRÁULICA PIE 1,5 HP - 3 HP	15	* 4405010673	RODÍZIO 1,5 (II) HP 60 HZ

*** VEJA A FICHA DE OBSERVACÕES**

CODIGO **41597, 41598, 41599, 41600, 41601, 41602, 41603, 41604, 41605, 41606**

DESCRICÃO: **BOMBA ASTRAL ALASKA MAX**

12	4405010161	JUNTA TÓRICA D 56,7X3,5	15	* 4405010598	RODÍZIO 1,5 (III) HP
13	* 4405010115	DIFUSOR <=0,75 HP	15	* 4405010674	RODÍZIO 1,5 (III) HP 60 HZ
15	* 4405010599	RODÍZIO 2 (II) CV	25	* 4405011206	VARETAS MOTOR (0,5 - 0,75 HP LL 1 HP III)
15	* 4405010675	RODÍZIO 2 (II) CV 60 HZ	25	* 4405011125	VARETAS MOTOR (1 HP LL)
15	* 4405010600	RODÍZIO 2 (III) HP	25	* 4405011126	VARETAS MOTOR (1,5 - 2 HP LL)
15	* 4405010676	RODÍZIO 2 (III) HP 60 HZ	25	* 4405011127	VARETAS MOTOR (1,5 HP ILL)
15	* 4405010601	RODÍZIO 3 (II) HP	25	* 4405011128	VARETAS MOTOR (2 HP LLI)
15	* 4405010677	RODÍZIO 3 (II) HP 60 HZ	25	* 4405011129	VARETAS MOTOR (3 HP LL)
15	* 4405010602	RODÍZIO 3 (III) HP	25	* 4405011130	VARETAS MOTOR (3 HP LLI)
15	* 4405010678	RODÍZIO 3 (III) HP 60 HZ	26	* 4405010135	ROLAMENTO MOTOR < 1 HP
16	4405010162	ANILHA DEFLECTORA (1/2-3/4-1-1,5-2 HP)	26	* 4405010136	ROLAMENTO MOTOR 1,5 HP - 3 HP
17	4405011112	JUNTA MECÂNICA D-15	27	* 4405011204	TAMPA TRASEIRA MOTOR C71 (1/3-1,25HP)
18	4405010160	JUNTA MANILHA MOTOR	27	* 4405011131	TAMPA TRASEIRA MOTOR (1,5-3 HP II)
19	4405011113	BRIDA SELO MECANICO	27	* 4405011132	TAMPA TRASEIRA MOTOR (1,5-3 HP III)
20	4405011116	PARAFUSO MOTOR	28	* 4405011210	CONDENSADOR 12 UF (1/2 HP)
21	* 4405011114	MANILHA MOTOR (0,5 -1 HP)	28	* 4405011211	CONDENSADOR 20 UF (3/4 - 1 HP LL)
21	* 4405011115	MANILHA MOTOR (1,5 - 3 HP)	28	* 4405011212	CONDENSATORE 25 UF (2 HP LL)
22	* 4405010163	ANILHA DEFLECTORA C.71 1/2-1 HP	28	* 4405011123	CONDENSADOR 35 UF (3 HP)
22	* 4405010164	ANILHA DEFLECTORA C.80 1,5-3 HP	29	* 4405011213	CONJUNTO CAIXA LIGAÇOES II
23	* 4405010158	V-RINGS 0,5 HP - 1 HP	29	* 4405011122	CONJUNTO CAIXA LIGAÇOES III
23	* 4405010159	V-RINGS 1,5 HP - 3 HP	30	* 4405011209	CONJUNTO VENTILADOR + TAMPA (1/3 - 1,2
24	* 4405011124	TAMPA DIANTEIRA MOTOR (0,5- 1 HP)	30	* 4405011120	TAMPA VENTILADOR + VENTILADOR (1,5 - 3
24	* 4405011118	TAMPA DIANTEIRA MOTOR (1,5- 3 HP II)	30	* 4405010851	TAMPA VENTILADOR + VENTILADOR
24	* 4405011119	TAMPA DIANTEIRA MOTOR C-80 (1,5 - 3 HP			

CODIGO **41597, 41598, 41599, 41600, 41601, 41602, 41603, 41604, 41605, 41606**

DESCRICÃO: **BOMBA ASTRAL ALASKA MAX**

OBSERVACÕES

POS	CODIGO	OBSERVACÕES
7	* 4405012005	PARA: 41597, 41598, 41599, 41600
7	* 4405012007	PARA: 41601, 41602, 41603, 41604, 41605, 41606
11	* 4405010112	PARA: 41597, 41598, 41599, 41600
11	* 4405010113	PARA: 41601, 41602, 41603, 41604, 41605, 41606
13	* 4405010115	PARA: 41597, 41598
13	* 4405010116	PARA: 41599, 41600, 41601, 41602, 41603, 41604
13	* 4405010117	PARA: 41605, 41606
15	* 4405010591	PARA: 41597 50 HZ
15	* 4405010667	PARA: 41597 60 HZ
15	* 4405010593	PARA: 41598 50 HZ
15	* 4405010669	PARA: 41598 60 HZ
15	* 4405010595	PARA: 41599 50 HZ
15	* 4405010671	PARA: 41599 60 HZ
15	* 4405010596	PARA: 41600 50 HZ
15	* 4405010672	PARA: 41600 60 HZ
15	* 4405010597	PARA: 41601 50 HZ
15	* 4405010673	PARA: 41601 60 HZ
15	* 4405010598	PARA: 41602 50 HZ
15	* 4405010674	PARA: 41602 60 HZ
15	* 4405010599	PARA: 41603 50 HZ
15	* 4405010675	PARA: 41603 60 HZ
15	* 4405010600	PARA: 41604 50 HZ
15	* 4405010676	PARA: 41604 60 HZ
15	* 4405010601	PARA: 41605 50 HZ
15	* 4405010677	PARA: 41605 60 HZ
15	* 4405010602	PARA: 41606 50 HZ
15	* 4405010678	PARA: 41606 60 HZ
21	* 4405011114	PARA: 41597, 41598, 41599, 41600
21	* 4405011115	PARA: 41601, 41602, 41603, 41604, 41605, 41606
22	* 4405010163	PARA: 41597, 41598, 41599, 41600
22	* 4405010164	PARA: 41601, 41602, 41603, 41604, 41605, 41606
23	* 4405010158	PARA: 41597, 41598, 41599, 41600
23	* 4405010159	PARA: 41601, 41602, 41603, 41604, 41605, 41606
24	* 4405011124	PARA: 41597, 41598, 41599, 41600
24	* 4405011118	PARA: 41601, 41603, 41605
24	* 4405011119	PARA: 41602, 41604, 41606
25	* 4405011206	PARA: 41597, 41598, 41600
25	* 4405011125	PARA: 41599
25	* 4405011126	PARA: 41601, 41602
25	* 4405011127	PARA: 41603
25	* 4405011128	PARA: 41604
25	* 4405011129	PARA: 41605
25	* 4405011130	PARA: 41606

CODIGO **41597, 41598, 41599, 41600, 41601, 41602, 41603, 41604, 41605, 41606**

DESCRICÃO: **BOMBA ASTRAL ALASKA MAX**

26	* 4405010135	PARA: 41597, 41598, 41599, 41600
26	* 4405010136	PARA: 41601, 41602, 41603, 41604, 41605, 41606
27	* 4405011204	PARA: 41597, 41598, 41599, 41600
27	* 4405011131	PARA: 41601, 41603, 41605
27	* 4405011132	PARA: 41602, 41604, 41606
28	* 4405011210	PARA: 41597
28	* 4405011211	PARA: 41598, 41599, 41601
28	* 4405011212	PARA: 41603
28	* 4405011123	PARA: 41605
29	* 4405011213	PARA: 41597, 41598, 41599, 41601, 41603, 41605
29	* 4405011122	PARA: 41600, 41602, 41604, 41606
30	* 4405011209	PARA: 41597, 41598, 41599, 41600
30	* 4405011120	PARA: 41601, 41603, 41605
30	* 4405010851	PARA: 41602, 41604, 41606