| ASTRALPOOL | KIT | REV: **1** FECHA: **28/02/2023** HOJA: **1/2** | **1433** |
|---|---|---|---|

CODIGO **68135, 68136, 68137, 68139**

DESCRIPCION: **TECH UV-C 16 / 40 / 75 / 130 W**

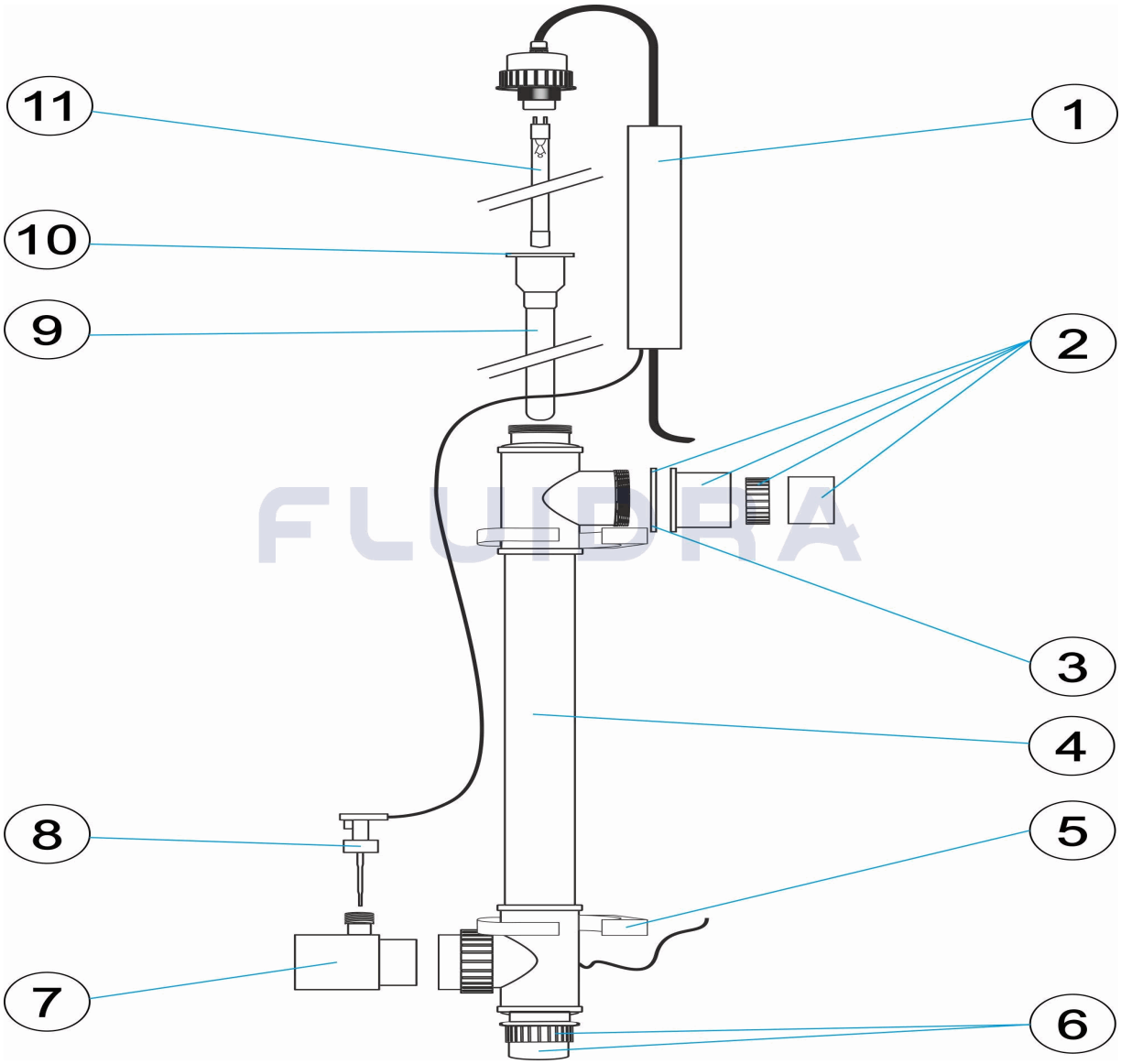


FLUIDRA

***ESPAÑOL***

| POS | CODIGO | DESCRIPCION | CANTIDAD | POS | CODIGO | DESCRIPCION | CANTIDAD |
|---|---|---|---|---|---|---|---|
| 1 | * 4408070106 | BALASTRO ELECT. 16/40W | | 7 | * 4408070118 | REDUCCION 63/63 | |
| 1 | * 4408070107 | BALASTRO ELECT. 75W | | 7 | * 4408070119 | REDUCCION 60/60 AMALGAM | |
| 1 | * 4408070108 | BALASTRO ELECT. 130W | | 8 | * 4408070120 | FLUJOSTATO | |
| 2 | 4408070109 | CONEXION 3 VIAS | | 9 | * 4408070121 | VAINA CUARZO 400X25MM 16/40W | |
| 2 | * 4408070110 | CONEXION 3 VIAS | | 9 | * 4408070122 | VAINA CUARZO 933X25MM 40/75W | |
| 3 | 4408070111 | JUNTA PARA CONEXION 3 VIAS | | 9 | * 4408070123 | VAINA CUARZO 920X31MM 130W | |
| 4 | * 4408070112 | CUBIERTA 16 WATT | | 10 | 4408070124 | JUNTA PARA VAINA DE CUARZO | |
| 4 | * 4408070113 | CUBIERTA 40/75 WATT | | 11 | * 68288 | LAMPARA 16W | |
| 4 | * 4408070114 | CUBIERTA 130 WATT | | 11 | * 68289 | LAMPARA 40W | |
| 5 | 4408070115 | GRIP DE INSTALACIÓN 75 MM | | 11 | * 68290 | LAMPARA 75W | |
| 6 | 4408070116 | TAPON 26 | | 11 | * 68295 | LAMPARA 130W | |

*** NOTA OBSERVACIONES**

CODIGO **68135, 68136, 68137, 68139**

DESCRIPCION: **TECH UV-C 16 / 40 / 75 / 130 W**

## OBSERVACIONES

| POS | CODIGO | OBSERVACIONES |
|---|---|---|
| 1 | * 4408070106 | PARA: 68135, 68136 |
| 1 | * 4408070107 | PARA: 68137 |
| 1 | * 4408070108 | PARA: 68139 |
| 2 | * 4408070110 | PARA: USA / UK |
| 4 | * 4408070112 | PARA: 68135 |
| 4 | * 4408070113 | PARA: 68136, 68137 |
| 4 | * 4408070114 | PARA: 68139 |
| 7 | * 4408070118 | PARA: 68139 |
| 7 | * 4408070119 | PARA: 68139 USA / UK |
| 8 | * 4408070120 | PARA: 68139 |
| 9 | * 4408070121 | PARA: 68135 |
| 9 | * 4408070122 | PARA: 68136, 68137 |
| 9 | * 4408070123 | PARA: 68139 |
| 11 | * 68288 | PARA: 68135 |
| 11 | * 68289 | PARA: 68136 |
| 11 | * 68290 | PARA: 68137 |
| 11 | * 68295 | PARA: 68139 |

CODE **68135, 68136, 68137, 68139**

DESCRIPTION: **TECH UV-C 16 / 40 / 75 / 130 W**

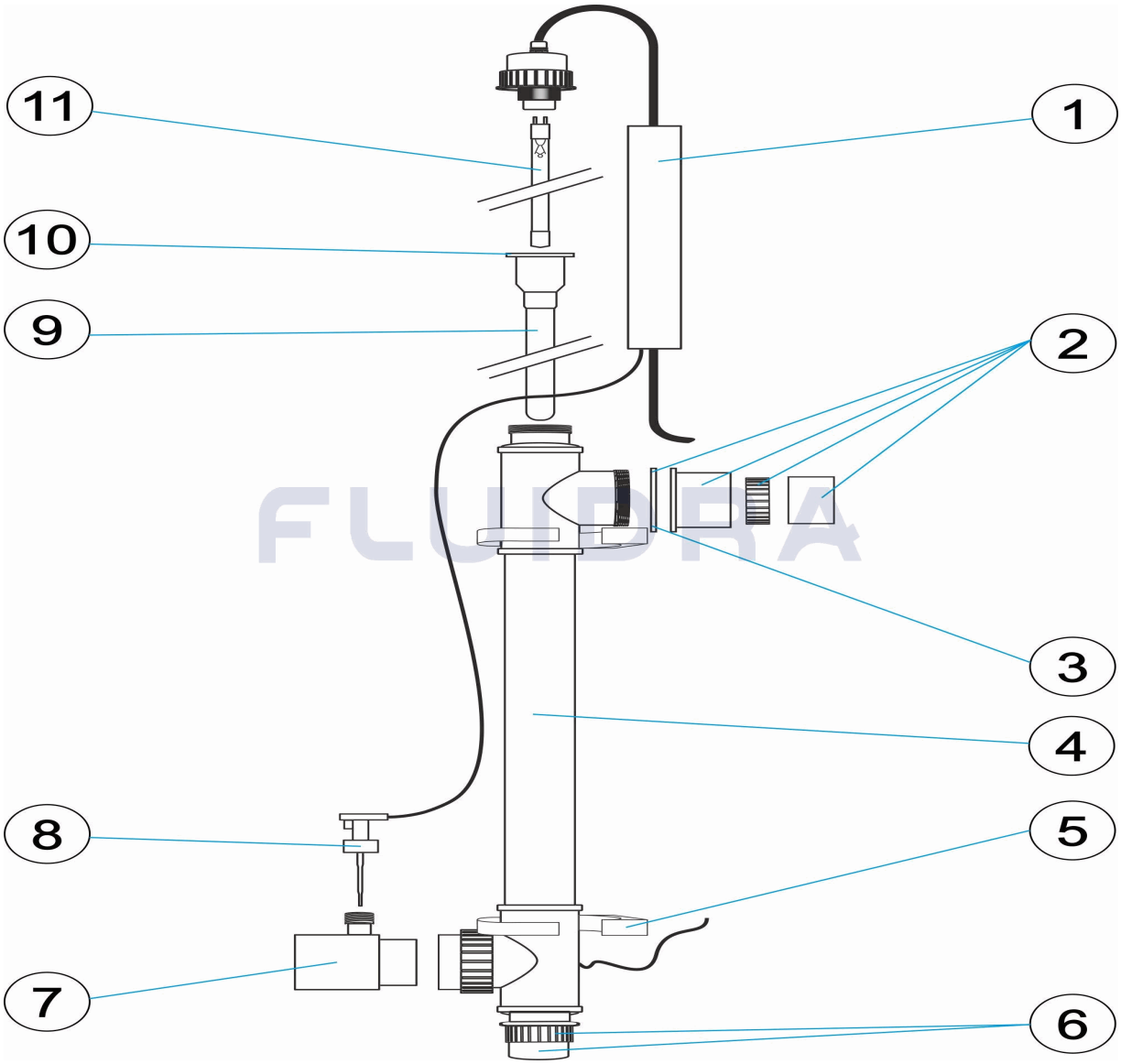


FLUIDRA

***FRANCAIS***

| POS | CODE | DESCRIPTION QUANTITE | POS | CODE | DESCRIPTION QUANTITE |
|---|---|---|---|---|---|
| 1 | * 4408070106 | BALLAST ELECT. 16/40W | 7 | * 4408070118 | RÉDUCTION 63/63 |
| 1 | * 4408070107 | BALLAST ELECT. 75W | 7 | * 4408070119 | RÉDUCTION 60/60 AMALGAM |
| 1 | * 4408070108 | BALLAST ELECT. 130W | 8 | * 4408070120 | CONTROLEUR DE DEBIT |
| 2 | 4408070109 | CONNEXION À 3 VOIES | 9 | * 4408070121 | GAINE DE QUARTZ 400X25MM 16/40W |
| 2 | * 4408070110 | CONNEXION À 3 VOIES | 9 | * 4408070122 | GAINE DE QUARTZ 933X25MM 40/75W |
| 3 | 4408070111 | JOINT POUR CONNEXION À 3 VOIES | 9 | * 4408070123 | GAINE DE QUARTZ 920X31MM 130W |
| 4 | * 4408070112 | CUVELAGE 16 WATT | 10 | 4408070124 | JOINT POUR MANCHON QUARTZ |
| 4 | * 4408070113 | CUVELAGE 40/75 WATT | 11 | * 68288 | LAMPE 16W |
| 4 | * 4408070114 | CUVELAGE 130 WATT | 11 | * 68289 | LAMPE 40W |
| 5 | 4408070115 | POIGNEE DE MONTAGE 75 MM | 11 | * 68290 | LAMPE 75W |
| 6 | 4408070116 | BOUCHON 26 | 11 | * 68295 | LAMPE 130W |

*** VOIR FICHE D'OBSERVATIONS**

CODE **68135, 68136, 68137, 68139**

DESCRIPTION: **TECH UV-C 16 / 40 / 75 / 130 W**

## OBSERVATIONS

| POS | CODE | OBSERVATIONS |
|---|---|---|
| 1 | * 4408070106 | POUR: 68135, 68136 |
| 1 | * 4408070107 | POUR: 68137 |
| 1 | * 4408070108 | POUR: 68139 |
| 2 | * 4408070110 | POUR: USA / UK |
| 4 | * 4408070112 | POUR: 68135 |
| 4 | * 4408070113 | POUR: 68136, 68137 |
| 4 | * 4408070114 | POUR: 68139 |
| 7 | * 4408070118 | POUR: 68139 |
| 7 | * 4408070119 | POUR: 68139 USA / UK |
| 8 | * 4408070120 | POUR: 68139 |
| 9 | * 4408070121 | POUR: 68135 |
| 9 | * 4408070122 | POUR: 68136, 68137 |
| 9 | * 4408070123 | POUR: 68139 |
| 11 | * 68288 | POUR: 68135 |
| 11 | * 68289 | POUR: 68136 |
| 11 | * 68290 | POUR: 68137 |
| 11 | * 68295 | POUR: 68139 |

# PARTS BREAKDOWN

REV.: **1** **1433**
DATE: **28/02/2023**
SHEET: **1/2**

CODE **68135, 68136, 68137, 68139**

DESCRIPTION: **TECH UV-C 16 / 40 / 75 / 130 W**

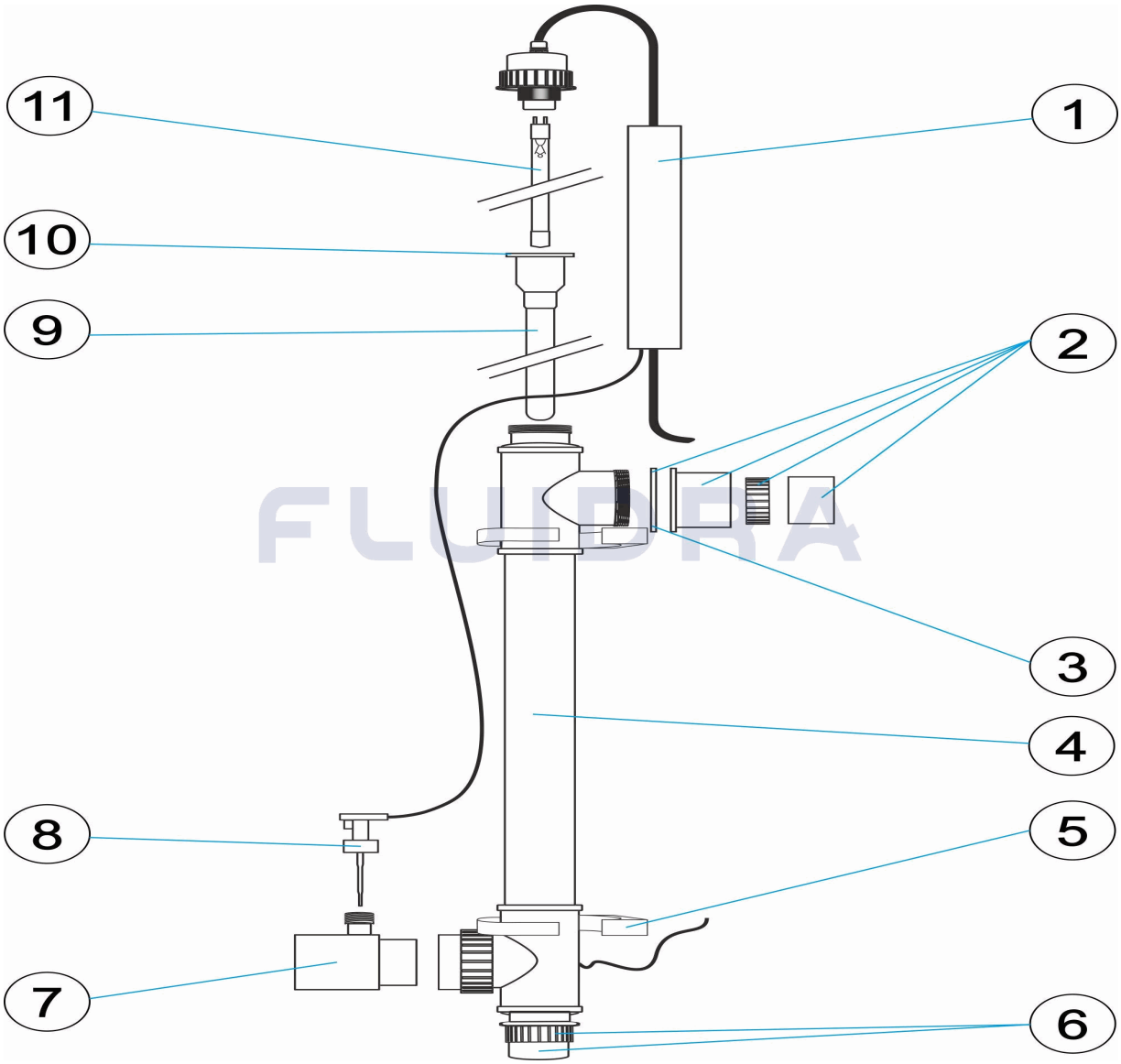


FLUIDRA

***ENGLISH***

| POS | CODE | DESCRIPTION | QUANTITY | POS | CODE | DESCRIPTION | QUANTITY |
|---|---|---|---|---|---|---|---|
| 1 | * 4408070106 | ELECT. BALLAST 16/40W | | 7 | * 4408070118 | 63/63 REDUCTION SOCKET | |
| 1 | * 4408070107 | ELECT. BALLAST 75W | | 7 | * 4408070119 | 60/60 REDUCTION SOCKET AMALGAM | |
| 1 | * 4408070108 | ELECT. BALLAST 130W | | 8 | * 4408070120 | FLOWSWITCH | |
| 2 | 4408070109 | 3-WAY CONNECTION | | 9 | * 4408070121 | QUARTZ TUBE CASE 400X25MM 16/40W | |
| 2 | * 4408070110 | 3-WAY CONNECTION | | 9 | * 4408070122 | QUARTZ TUBE CASE 933X25MM 40/75W | |
| 3 | 4408070111 | O'RING FOR 3-WAY CONNECTION | | 9 | * 4408070123 | QUARTZ TUBE CASE 920X31MM 130W | |
| 4 | * 4408070112 | HOUSING 16 WATT | | 10 | 4408070124 | GASKET RING FOR QUARTZ SLEEVE | |
| 4 | * 4408070113 | HOUSING 40/75 WATT | | 11 | * 68288 | 16W LAMP | |
| 4 | * 4408070114 | HOUSING 130 WATT | | 11 | * 68289 | 40WLAMP | |
| 5 | 4408070115 | INSTALLATION GRIP 75 MM | | 11 | * 68290 | 75W LAMP | |
| 6 | 4408070116 | PLUG 26 | | 11 | * 68295 | 130W LAMP | |

*** SEE OBSERVATIONS SHEET**

CODE **68135, 68136, 68137, 68139**

DESCRIPTION: **TECH UV-C 16 / 40 / 75 / 130 W**

## OBSERVATIONS

| POS | CODE | OBSERVATIONS |
|---|---|---|
| 1 | * 4408070106 | FOR: 68135, 68136 |
| 1 | * 4408070107 | FOR: 68137 |
| 1 | * 4408070108 | FOR: 68139 |
| 2 | * 4408070110 | FOR: USA / UK |
| 4 | * 4408070112 | FOR: 68135 |
| 4 | * 4408070113 | FOR: 68136, 68137 |
| 4 | * 4408070114 | FOR: 68139 |
| 7 | * 4408070118 | FOR: 68139 |
| 7 | * 4408070119 | FOR: 68139 USA / UK |
| 8 | * 4408070120 | FOR: 68139 |
| 9 | * 4408070121 | FOR: 68135 |
| 9 | * 4408070122 | FOR: 68136, 68137 |
| 9 | * 4408070123 | FOR: 68139 |
| 11 | * 68288 | FOR: 68135 |
| 11 | * 68289 | FOR: 68136 |
| 11 | * 68290 | FOR: 68137 |
| 11 | * 68295 | FOR: 68139 |

| ASTRALPOOL | ESPLOSO | REV.: 1<br>DATA: 28/02/2023<br>PAG.: 1/2 | 1433 |
|---|---|---|---|

CODICE **68135, 68136, 68137, 68139**

DESCRIZIONE: **TECH UV-C 16 / 40 / 75 / 130 W**

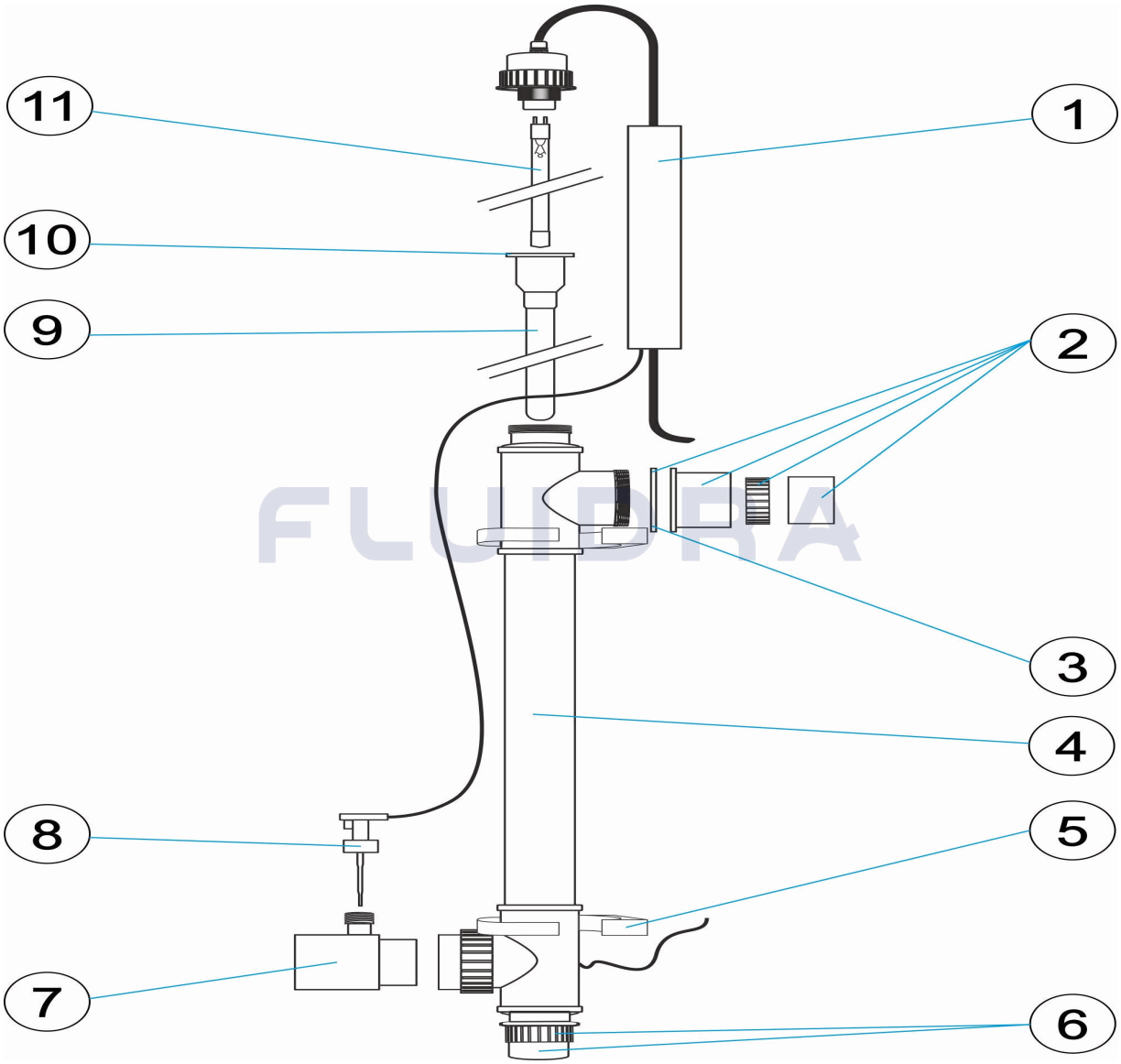


FLUIDRA

***ITALIANO***

| POS | CODICE | DESCRIZIONE | QUANTITA' | POS | CODICE | DESCRIZIONE | QUANTITA' |
|---|---|---|---|---|---|---|---|
| 1 | * 4408070106 | BALASTRO ELETTR. 16/40W | | 7 | * 4408070118 | RIDUZIONE 63/63 | |
| 1 | * 4408070107 | BALASTRO ELETTR. 75W | | 7 | * 4408070119 | RIDUZIONE 60/60 AMALGAM | |
| 1 | * 4408070108 | BALASTRO ELETTR. 130W | | 8 | * 4408070120 | FLUSSOSTATO | |
| 2 | 4408070109 | CONNESSIONE A 3 VIE | | 9 | * 4408070121 | GUAINA QUARZO 400X25MM 16/40W | |
| 2 | * 4408070110 | CONNESSIONE A 3 VIE | | 9 | * 4408070122 | GUAINA QUARZO 933X25MM 40/75W | |
| 3 | 4408070111 | GUARNIZIONE PER CONNESSIONE A 3 VIE | | 9 | * 4408070123 | GUAINA QUARZO 920X31MM 130W | |
| 4 | * 4408070112 | INVOLUCRO 16 WATT | | 10 | 4408070124 | GUARNIZIONE PER QUARZO MANICHE | |
| 4 | * 4408070113 | INVOLUCRO 40/75 WATT | | 11 | * 68288 | LAMPADA 16W | |
| 4 | * 4408070114 | INVOLUCRO 130 WATT | | 11 | * 68289 | LAMPADA 40W | |
| 5 | 4408070115 | IMPUGNATURA DI INSTALLAZIONE 75 MM | | 11 | * 68290 | LAMPADA 75W | |
| 6 | 4408070116 | TAPPO 26 | | 11 | * 68295 | LAMPADA 130W | |

*** SI FACCIA RIFERIMENTO AL FOGLIO DELLE OSSERVAZIONI**

CODICE **68135, 68136, 68137, 68139**

DESCRIZIONE: **TECH UV-C 16 / 40 / 75 / 130 W**

## OSSERVAZIONI

| POS | CODICE | OSSERVAZIONI |
|---|---|---|
| 1 | * 4408070106 | PER: 68135, 68136 |
| 1 | * 4408070107 | PER: 68137 |
| 1 | * 4408070108 | PER: 68139 |
| 2 | * 4408070110 | PER: USA / UK |
| 4 | * 4408070112 | PER: 68135 |
| 4 | * 4408070113 | PER: 68136, 68137 |
| 4 | * 4408070114 | PER: 68139 |
| 7 | * 4408070118 | PER: 68139 |
| 7 | * 4408070119 | PER: 68139 USA / UK |
| 8 | * 4408070120 | PER: 68139 |
| 9 | * 4408070121 | PER: 68135 |
| 9 | * 4408070122 | PER: 68136, 68137 |
| 9 | * 4408070123 | PER: 68139 |
| 11 | * 68288 | PER: 68135 |
| 11 | * 68289 | PER: 68136 |
| 11 | * 68290 | PER: 68137 |
| 11 | * 68295 | PER: 68139 |

| ASTRALPOOL | EINZELTEILE | ÜBER.: **1** DATUM: **28/02/2023** BLATT: **1/2** | **1433** |
|---|---|---|---|

CODE **68135, 68136, 68137, 68139**

BESCHREIBURG: **TECH UV-C 16 / 40 / 75 / 130 W**

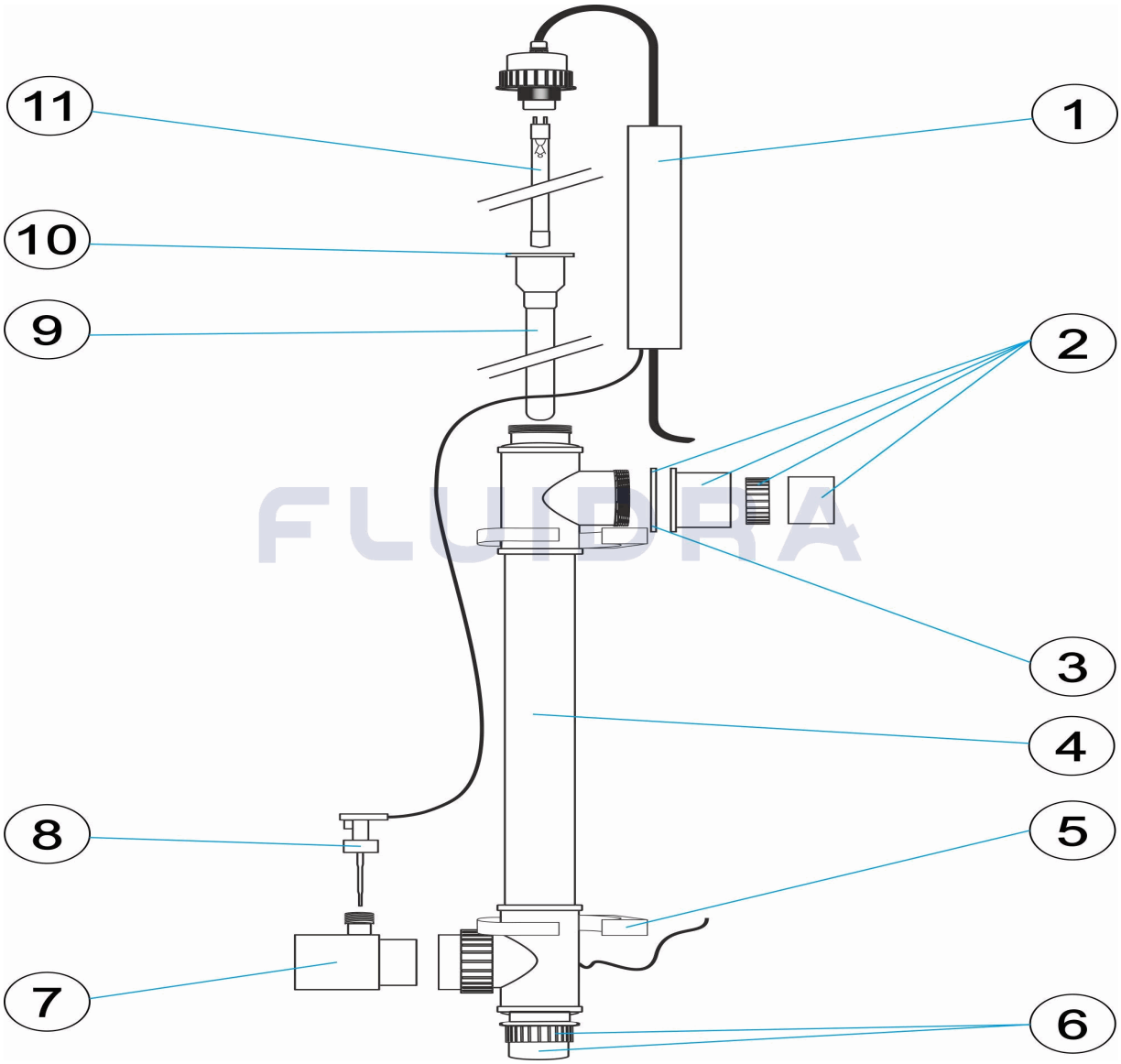


FLUIDRA

***DEUTSCH***

| POS | CODE | BESCHREIBURG | MENGE | POS | CODE | BESCHREIBURG | MENGE |
|---|---|---|---|---|---|---|---|
| 1 | * 4408070106 | ELEKTR.VORSCHALTGERÄT 16/40W | | 7 | * 4408070118 | REDUZIERSTÜCK 63/63 | |
| 1 | * 4408070107 | ELEKTR.VORSCHALTGERÄT 75W | | 7 | * 4408070119 | REDUZIERSTÜCK 60/60 AMALGAM | |
| 1 | * 4408070108 | ELEKTR.VORSCHALTGERÄT 130W | | 8 | * 4408070120 | DURCHFLUSSMESSER | |
| 2 | 4408070109 | 3-WEGE-ANSCHLUSS | | 9 | * 4408070121 | HÜLSE QUARZRÖHRE 400X25MM 16/40W | |
| 2 | * 4408070110 | 3-WEGE-ANSCHLUSS | | 9 | * 4408070122 | HÜLSE QUARZRÖHRE 933X25MM 40/75W | |
| 3 | 4408070111 | DICHTUNG FÜR 3-WEGE-ANSCHLUSS | | 9 | * 4408070123 | HÜLSE QUARZRÖHRE 920X31MM 130W | |
| 4 | * 4408070112 | GEHÄUSE 16 WATT | | 10 | 4408070124 | DICHTUNGSRING FÜR QUARTZHÜLSE | |
| 4 | * 4408070113 | GEHÄUSE 40/75 WATT | | 11 | * 68288 | LAMPE 16W | |
| 4 | * 4408070114 | GEHÄUSE 130 WATT | | 11 | * 68289 | LAMPE 40W | |
| 5 | 4408070115 | INSTALLATIONSGRIFF 75 MM | | 11 | * 68290 | LAMPE 75W | |
| 6 | 4408070116 | STOPFEN 26 | | 11 | * 68295 | LAMPE 130W | |

*** SIEHE ANMERKUGSBLATT**

CODE **68135, 68136, 68137, 68139**

BESCHREIBURG: **TECH UV-C 16 / 40 / 75 / 130 W**

## HINWEISE

| POS | CODE | HINWEISE |
|---|---|---|
| 1 | * 4408070106 | FÜR: 68135, 68136 |
| 1 | * 4408070107 | FÜR: 68137 |
| 1 | * 4408070108 | FÜR: 68139 |
| 2 | * 4408070110 | FÜR: USA / UK |
| 4 | * 4408070112 | FÜR: 68135 |
| 4 | * 4408070113 | FÜR: 68136, 68137 |
| 4 | * 4408070114 | FÜR: 68139 |
| 7 | * 4408070118 | FÜR: 68139 |
| 7 | * 4408070119 | FÜR: 68139 USA / UK |
| 8 | * 4408070120 | FÜR: 68139 |
| 9 | * 4408070121 | FÜR: 68135 |
| 9 | * 4408070122 | FÜR: 68136, 68137 |
| 9 | * 4408070123 | FÜR: 68139 |
| 11 | * 68288 | FÜR: 68135 |
| 11 | * 68289 | FÜR: 68136 |
| 11 | * 68290 | FÜR: 68137 |
| 11 | * 68295 | FÜR: 68139 |

| ASTRALPOOL | ITEM | REV.: 1<br>DATA: 28/02/2023<br>FOLHA: 1/2 | 1433 |
|---|---|---|---|

CODIGO **68135, 68136, 68137, 68139**

DESCRICÃO: **TECH UV-C 16 / 40 / 75 / 130 W**

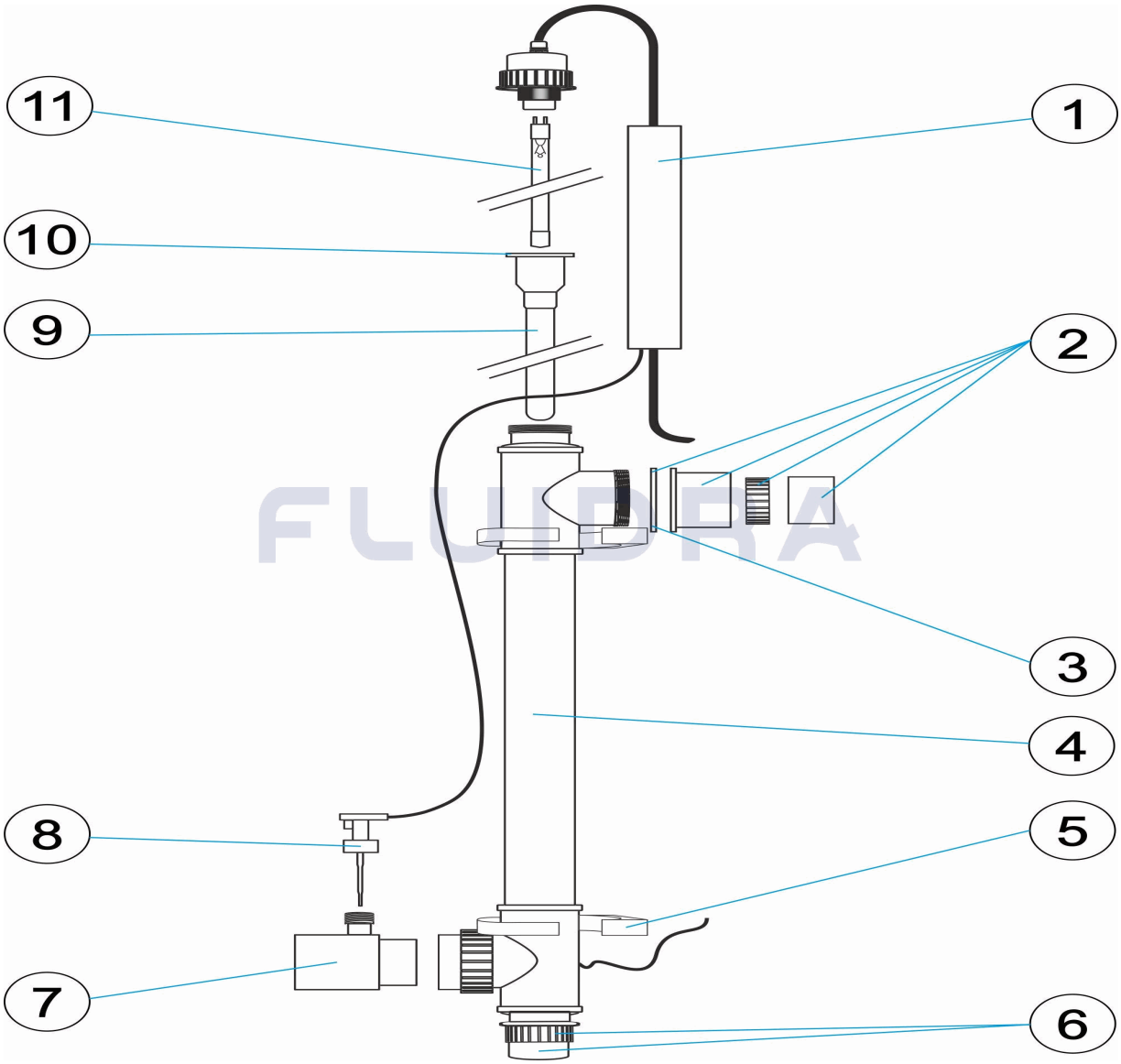


FLUIDRA

***PORTUGUES***

| POS | CODIGO | DESCRICÃO | JANTIDADE | POS | CODIGO | DESCRICÃO | JANTIDADE |
|---|---|---|---|---|---|---|---|
| 1 | * 4408070106 | BALASTRO ELECTR. 16/40W | | 7 | * 4408070118 | REDUÇÃO 63/63 | |
| 1 | * 4408070107 | BALASTRO ELECTR. 75W | | 7 | * 4408070119 | REDUÇÃO 60/60 AMALGAM | |
| 1 | * 4408070108 | BALASTRO ELECTR. 130W | | 8 | * 4408070120 | FLUXO-ESTATO | |
| 2 | 4408070109 | CONEXÃO DE 3 VIAS | | 9 | * 4408070121 | BAINHA QUARTZO 400X25MM 16/40W | |
| 2 | * 4408070110 | CONEXÃO DE 3 VIAS | | 9 | * 4408070122 | BAINHA QUARTZO 933X25MM 40/75W | |
| 3 | 4408070111 | JUNTA PARA CONEXÃO DE 3 VIAS | | 9 | * 4408070123 | BAINHA QUARTZO 920X31MM 130W | |
| 4 | * 4408070112 | INVÓLUCRO 16 WATT | | 10 | 4408070124 | JUNTA PARA MANGA DE QUARTZO | |
| 4 | * 4408070113 | INVÓLUCRO 40/75 WATT | | 11 | * 68288 | LÂMPADA 16W | |
| 4 | * 4408070114 | INVÓLUCRO 130 WATT | | 11 | * 68289 | LÂMPADA 40W | |
| 5 | 4408070115 | GRIP DE INSTALAÇÃO 75 MM | | 11 | * 68290 | LÂMPADA 75W | |
| 6 | 4408070116 | TAMPÃO 26 | | 11 | * 68295 | LÂMPADA 130W | |

*** VEJA A FICHA DE OBSERVACÕES**

CODIGO **68135, 68136, 68137, 68139**

DESCRICÃO: **TECH UV-C 16 / 40 / 75 / 130 W**

## OBSERVACÕES

| POS | CODIGO | OBSERVACÕES |
|---|---|---|
| 1 | * 4408070106 | PARA: 68135, 68136 |
| 1 | * 4408070107 | PARA: 68137 |
| 1 | * 4408070108 | PARA: 68139 |
| 2 | * 4408070110 | PARA: USA / UK |
| 4 | * 4408070112 | PARA: 68135 |
| 4 | * 4408070113 | PARA: 68136, 68137 |
| 4 | * 4408070114 | PARA: 68139 |
| 7 | * 4408070118 | PARA: 68139 |
| 7 | * 4408070119 | PARA: 68139 USA / UK |
| 8 | * 4408070120 | PARA: 68139 |
| 9 | * 4408070121 | PARA: 68135 |
| 9 | * 4408070122 | PARA: 68136, 68137 |
| 9 | * 4408070123 | PARA: 68139 |
| 11 | * 68288 | PARA: 68135 |
| 11 | * 68289 | PARA: 68136 |
| 11 | * 68290 | PARA: 68137 |
| 11 | * 68295 | PARA: 68139 |