ZODIAC	KIT	REV: **2** FECHA: **25/05/2022** HOJA: **1/12**	**1353**

CODIGO **WH000425**

DESCRIPCION: **BOMBA DE CALOR PM40**

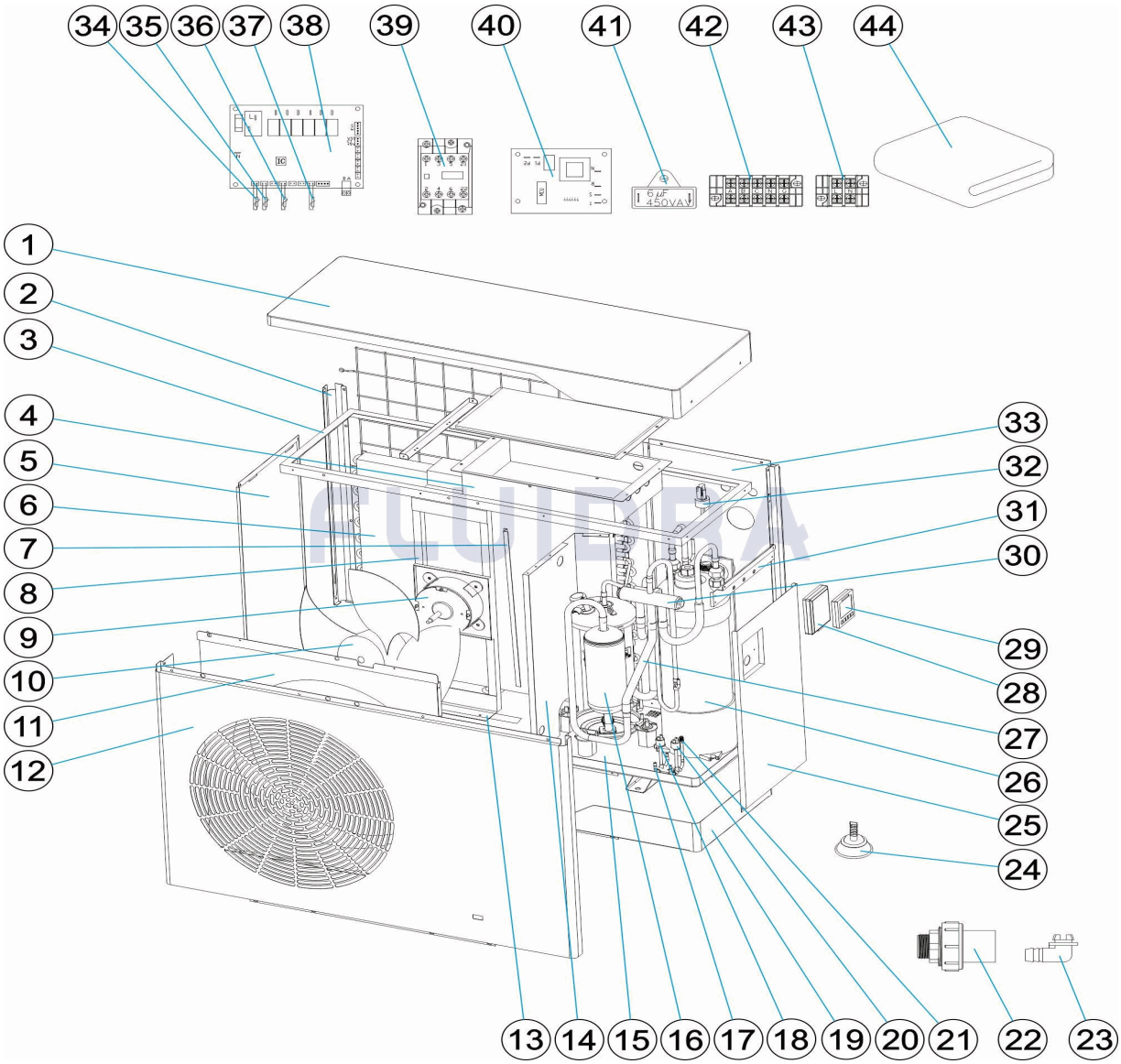

ESPAÑOL

POS	CODIGO	DESCRIPCION	CANTIDAD	POS	CODIGO	DESCRIPCION	CANTIDAD
1	66069R0334	TAPA SUPERIOR		16	66074R0040	COMPRESOR	
2	66069R0348	SOPORTE PARA PANEL IZQUIERDO		17	66069R0015	TUBERÍAS PARA PRESOSTATO	
3	66069R0335	TAPA SUPERIOR		18	66069R0031	INTERRUPTOR ALTA PRESIÓN	
4	66069R0352	CAJA ELECTRICA		19	66069R0349	TAPA FONDO	
5	66069R0337	PANEL IZQUIERDO		20	66069R0032	INTERRUPTOR BAJA PRESIÓN	
6	66074R0038	EVAPORADOR		21	66069R0022	VÁLVULA PARA VACIADO/RELLENO	
7	66069R0351	SOPORTE PANEL FRONTAL		22	66069R0041	CONECTOR DE AGUA	
8	66069R0338	SOPORTE PARA VENTILADOR MOTOR		23	66069R0042	PURGA AGUA CONDENSACIÓN	
9	66074R0039	MOTOR VENTILADOR		24	66069R0102	PIES ANTIVIBRATORIOS	
10	66074R0009	ASPAS VENTILADOR		25	66069R0344	PANEL DERECHO	
11	66069R0341	REJILLA VENTILADOR		26	66074R0041	INTERCAMBIADOR DE TITANIO	
12	66069R0340	PANEL FRONTAL		27	66074R0042	TUBERÍAS PARA INTERCAMBIADOR	
13	66069R0039	RESISTENCIA DESHIELO		28	66069R0262	CAJA CONTROLADOR IMPERMEABLE	

CODIGO **WH000425**

DESCRIPCION: **BOMBA DE CALOR PM40**

14	66069R0339	PANEL PARTICIÓN	29	66069R3304	CONTROLADOR LCD (PM40)
15	66069R0353	PANEL INFERIOR	30	66073R0013	VÁLVULA DE 4 VÍAS
31	66069R0350	CONEXIÓN PLACA TAPA SUPERIOR	38	66069R0060	PLACA BASE PCB
32	66069R0030	FLUJOSTATO	39	66069R0354	CONTACTOR AC
33	66069R0346	PANEL TRASERO	40	66073R0037	PROTECCION DE FASES PARA PCB
34	66069R0054	SENSOR TEMPERATURA L=1200	41	66073R0025	CONDENSADOR VENTILADOR (6UF)
35	66069R0055	SENSOR TEMP (L=1200 COBRE C-NEGRO)	42	66073R0036	TERMINAL DE POTENCIA
36	66069R0057	SENSOR TEMPERATURA L=800	43	66069R0053	TERMINAL PARA BOMBA
37	66069R0347	SENSOR TEMPERATURA L=2000	44	ACXXPR1005	FUNDA HIVERNAL EV25/AC25/ST20-25/MD-

CODE **WH000425**

DESCRIPTION: **POMPE À CHALEUR PM40**

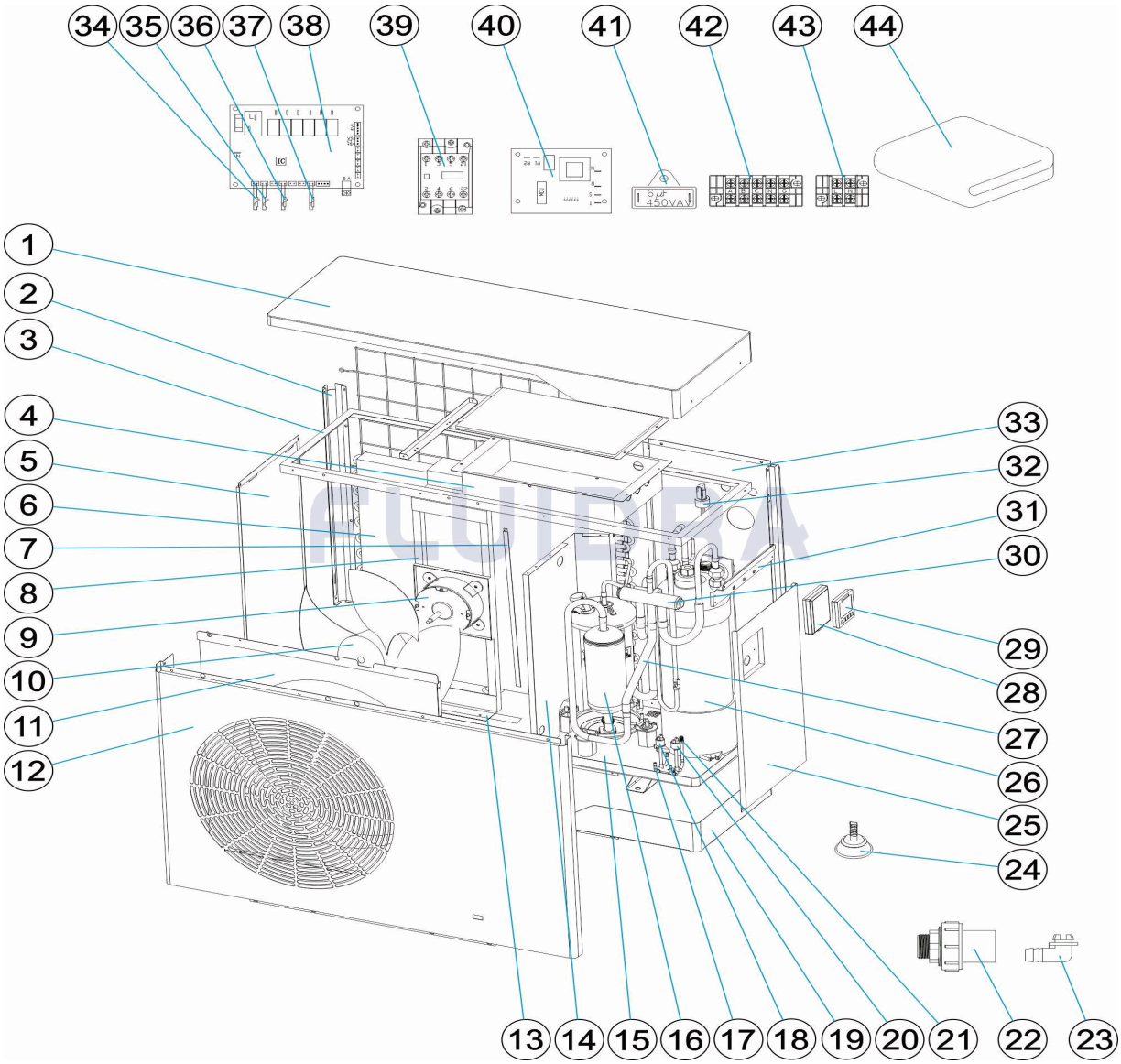

FRANCAIS

POS	CODE	DESCRIPTION	QUANTITE	POS	CODE	DESCRIPTION	QUANTITE
1	66069R0334	COUVERCLE SUPÉRIEUR		16	66074R0040	COMPRESSEUR	
2	66069R0348	SUPPORT POUR PANNEAU GAUCHE		17	66069R0015	TUYAUTERIES POUR PRESSOSTAT	
3	66069R0335	COUVERCLE SUPÉRIEUR		18	66069R0031	INTERRUPTEUR HAUTE PRESSION	
4	66069R0352	BOÎTIER ÉLECTRIQUE		19	66069R0349	COUVERCLE FOND	
5	66069R0337	PANNEAU GAUCHE		20	66069R0032	INTERRUPTEUR BASSE PRESSION	
6	66074R0038	ÉVAPORATEUR		21	66069R0022	VANNE DE VIDANGE/REMPLISSAGE	
7	66069R0351	SUPPORT PANNEAU FRONTAL		22	66069R0041	RACCORD EAU	
8	66069R0338	SUPPORT POUR VENTILATEUR MOTEUR		23	66069R0042	PURGE EAU CONDENSATION	
9	66074R0039	MOTEUR VENTILATEUR		24	66069R0102	PIEDS ANTI-VIBRATION	
10	66074R0009	PALES VENTILATEUR		25	66069R0344	PANNEAU DROIT	
11	66069R0341	GRILLE VENTILATEUR		26	66074R0041	ÉCHANGEUR EN TITANE	
12	66069R0340	PANNEAU FRONTAL		27	66074R0042	TUYAUTERIES POUR ÉCHANGEUR	
13	66069R0039	RÉSISTANCE DÉGEL		28	66069R0262	BOÎTIER CONTRÔLEUR ÉTANCHE	

CODE **WH000425**

DESCRIPTION: **POMPE À CHALEUR PM40**

14	66069R0339	PANNEAU SÉPARATION	29	66069R3304	CONTRÔLEUR LCD (PM40)
15	66069R0353	PANNEAU INFÉRIEUR	30	66073R0013	VANNE 4 VOIES
31	66069R0350	CONNEXION PLAQUE COUVERCLE SUPÉF	38	66069R0060	PLAQUE BASE PCB
32	66069R0030	FLUXOSTAT	39	66069R0354	CONTACTEUR AC
33	66069R0346	PANNEAU ARRIÈRE	40	66073R0037	PROTECTION DE PHASES POUR PCB
34	66069R0054	CAPTEUR TEMPÉRATURE L=1200	41	66073R0025	CONDENSATEUR VENTILATEUR (6UF)
35	66069R0055	CAPTEUR TEMPÉRATURE L=1200	42	66073R0036	BORNE DE PUISSANCE
36	66069R0057	CAPTEUR TEMPÉRATURE L=800	43	66069R0053	BORNE POUR POMPE
37	66069R0347	CAPTEUR TEMPÉRATURE L=2000	44	ACXXPR1005	COUVERTURE D'HIVERNAGE EV25/AC25/S

CODE **WH000425**

DESCRIPTION: **HEAT PUMP PM40**

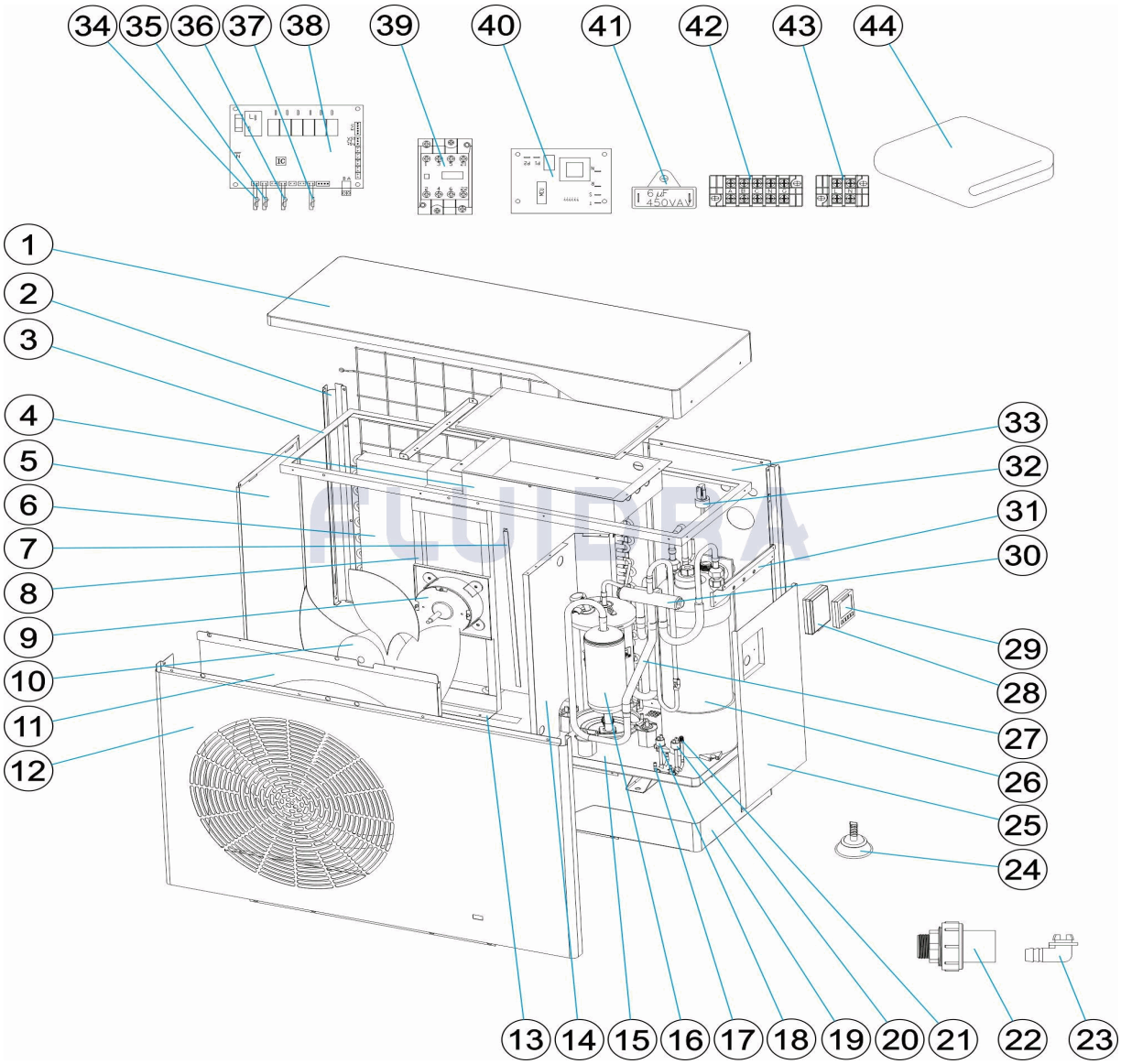

ENGLISH

POS	CODE	DESCRIPTION QUANTITY	POS	CODE	DESCRIPTION QUANTITY
1	66069R0334	TOP CAP	16	66074R0040	COMPRESSOR
2	66069R0348	LEFT PANEL HOLDER	17	66069R0015	PIPEWORK FOR PRESSURE SWITCH
3	66069R0335	TOP CAP	18	66069R0031	HIGH PRESSURE SWITCH
4	66069R0352	ELECTRIC BOX	19	66069R0349	BOTTOM COVER
5	66069R0337	LEFT SIDE PANEL	20	66069R0032	LOW PRESSURE SWITCH
6	66074R0038	EVAPORATOR	21	66069R0022	VALVE FOR VACUUM & FILLING
7	66069R0351	FRONT PANEL HOLDER	22	66069R0041	WATER CONNECTOR
8	66069R0338	FAN MOTOR HOLDER	23	66069R0042	WATER CONDENSATION PURGE
9	66074R0039	FAN MOTOR	24	66069R0102	ANTI-VIBRATION FEET
10	66074R0009	FAN BLADE	25	66069R0344	RIGHT SIDE PANEL
11	66069R0341	FAN GUARD	26	66074R0041	TITANIUM HEAT EXCHANGER
12	66069R0340	FRONT PANEL	27	66074R0042	PIPEWORK FOR HEAT EXCHANGER
13	66069R0039	BOTTOM HEATER FOR EVAPORATOR	28	66069R0262	WATERPROOF CONTROLLER BOX

CODE **WH000425**

DESCRIPTION: **HEAT PUMP PM40**

14	66069R0339	PARTITION PANEL	29	66069R3304	LCD CONTROLLER (PM40)
15	66069R0353	BOTTOM PANEL	30	66073R0013	4-WAY VALVE
31	66069R0350	TOP CAP CONNECTION PLATE	38	66069R0060	PCB MOTHER BOARD
32	66069R0030	WATER FLOW SWITCH	39	66069R0354	AC CONTACTOR
33	66069R0346	BACK PANEL	40	66073R0037	PHASES PROTECTION PCB
34	66069R0054	TEMP SENSOR (L=1200 COPPER C-RED)	41	66073R0025	FAN CAPACITOR (6UF)
35	66069R0055	TEMP SENSOR (L=1200 COPPER C-BLACK	42	66073R0036	POWER TERMINAL
36	66069R0057	TEMP SENSOR (L=800 PLASTIC C-WHITE)	43	66069R0053	PUMP TERMINAL
37	66069R0347	TEMP SENSOR (L=2000 COPPER C-GREEN	44	ACXXPR1005	WINTER COVER EV25/AC25/ST20-25/MD-TI

CODICE **WH000425**

DESCRIZIONE: **POMPA DI CALORE PM40**

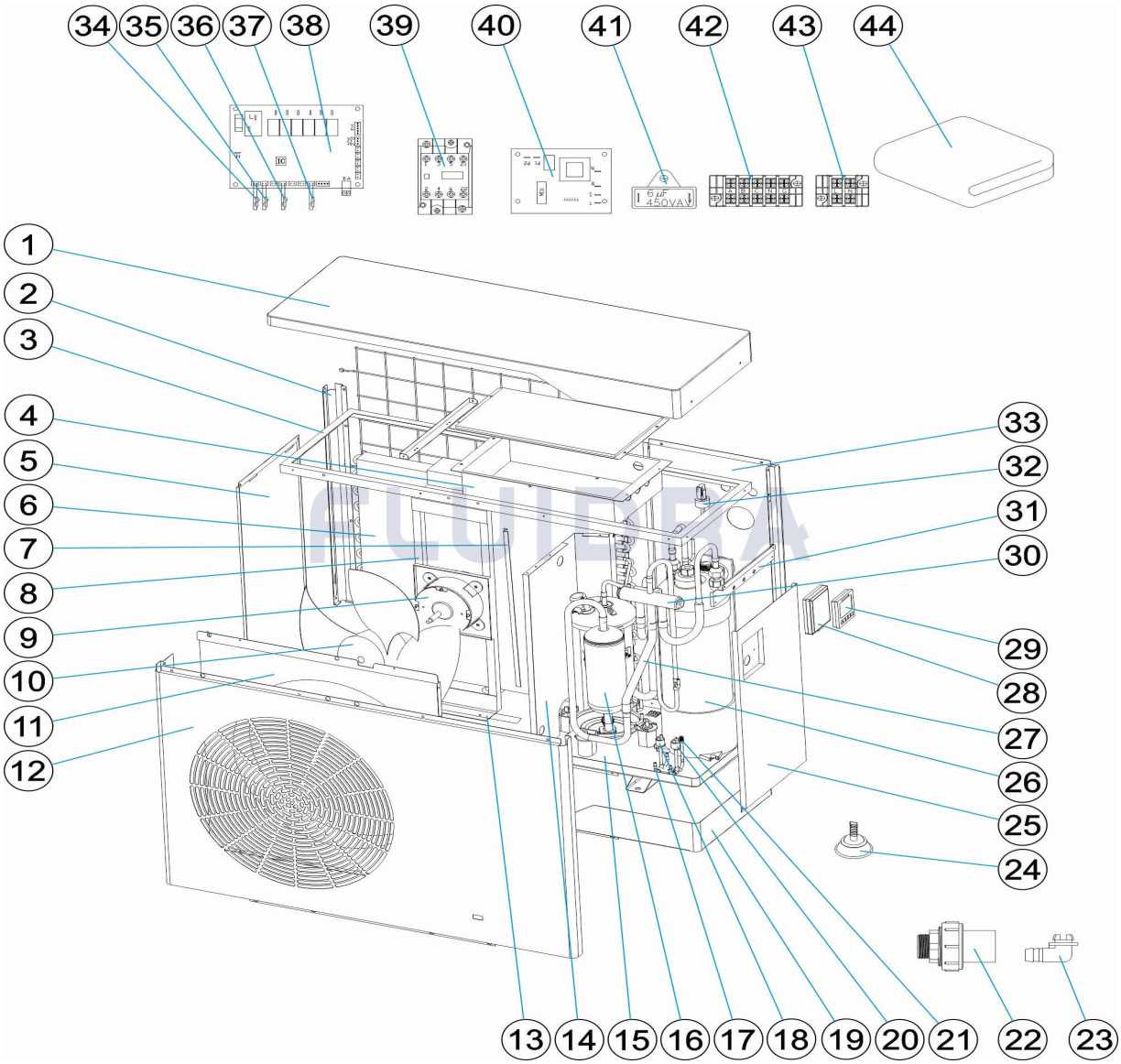

ITALIANO

POS	CODICE	DESCRIZIONE QUANTITA'	POS	CODICE	DESCRIZIONE QUANTITA'
1	66069R0334	COPERCHIO SUPERIORE	16	66074R0040	COMPRESSORE
2	66069R0348	SUPPORTO PER PANNELLO SINISTRO	17	66069R0015	TUBAZIONE PER PRESSOSTATO
3	66069R0335	COPERCHIO SUPERIORE	18	66069R0031	INTERRUTTORE ALTA PRESSIONE
4	66069R0352	SCATOLA DI DERIVAZIONE	19	66069R0349	COPERTURA FONDO
5	66069R0337	PANNELLO SINISTRO	20	66069R0032	INTERRUTTORE BASSA PRESSIONE
6	66074R0038	EVAPORATORE	21	66069R0022	VALVOLA DI SVUOTAMENTO/RIEMPIMENTC
7	66069R0351	SUPPORTO PANNELLO FRONTALE	22	66069R0041	CONNETTORE ACQUA
8	66069R0338	SUPPORTO PER VENTILATORE MOTORE	23	66069R0042	SCARICO ACQUA CONDENSAZIONE
9	66074R0039	MOTORE VENTILATORE	24	66069R0102	PIEDINI ANTIVIBRAZIONE
10	66074R0009	PALE VENTILATORE	25	66069R0344	PANNELLO DESTRO
11	66069R0341	GRIGLIA VENTILATORE	26	66074R0041	INTERCAMBIATORE IN TITANIO
12	66069R0340	PANNELLO FRONTALE	27	66074R0042	TUBAZIONE PER INTERCAMBIATORE
13	66069R0039	RESISTENZA DISGELO	28	66069R0262	SCATOLA CONTROLLO IMPERMEABILE

CODICE **WH000425**

DESCRIZIONE: **POMPA DI CALORE PM40**

14	66069R0339	PANNELLO PARTIZIONE	29	66069R3304	CONTROLLER LCD (PM40)
15	66069R0353	PANNELLO INFERIORE	30	66073R0013	VALVOLA A 4 VIE
31	66069R0350	CONNESSIONE PLACCA SINISTRA	38	66069R0060	SCHEDA BASE PCB
32	66069R0030	FLUSSOSTATO	39	66069R0354	TELERUTTORE AC
33	66069R0346	PANNELLO INDIETRO	40	66073R0037	PROTEZIONE FASI PER PCB
34	66069R0054	SENSORE TEMPERATURA L=1200	41	66073R0025	CONDENSATORE VENTILATORE (6UF)
35	66069R0055	SENSORE TEMPERATURA L=1200	42	66073R0036	TERMINALE DI POTENZA
36	66069R0057	SENSORE TEMPERATURA L=800	43	66069R0053	TERMINALE PER POMPA
37	66069R0347	SENSORE TEMPERATURA L=2000	44	ACXXPR1005	COPERTA DI INVERNO EV25/AC25/ST20-25/

CODE **WH000425**

BESCHREIBURG: **WÄRMEPUMPE PM40**

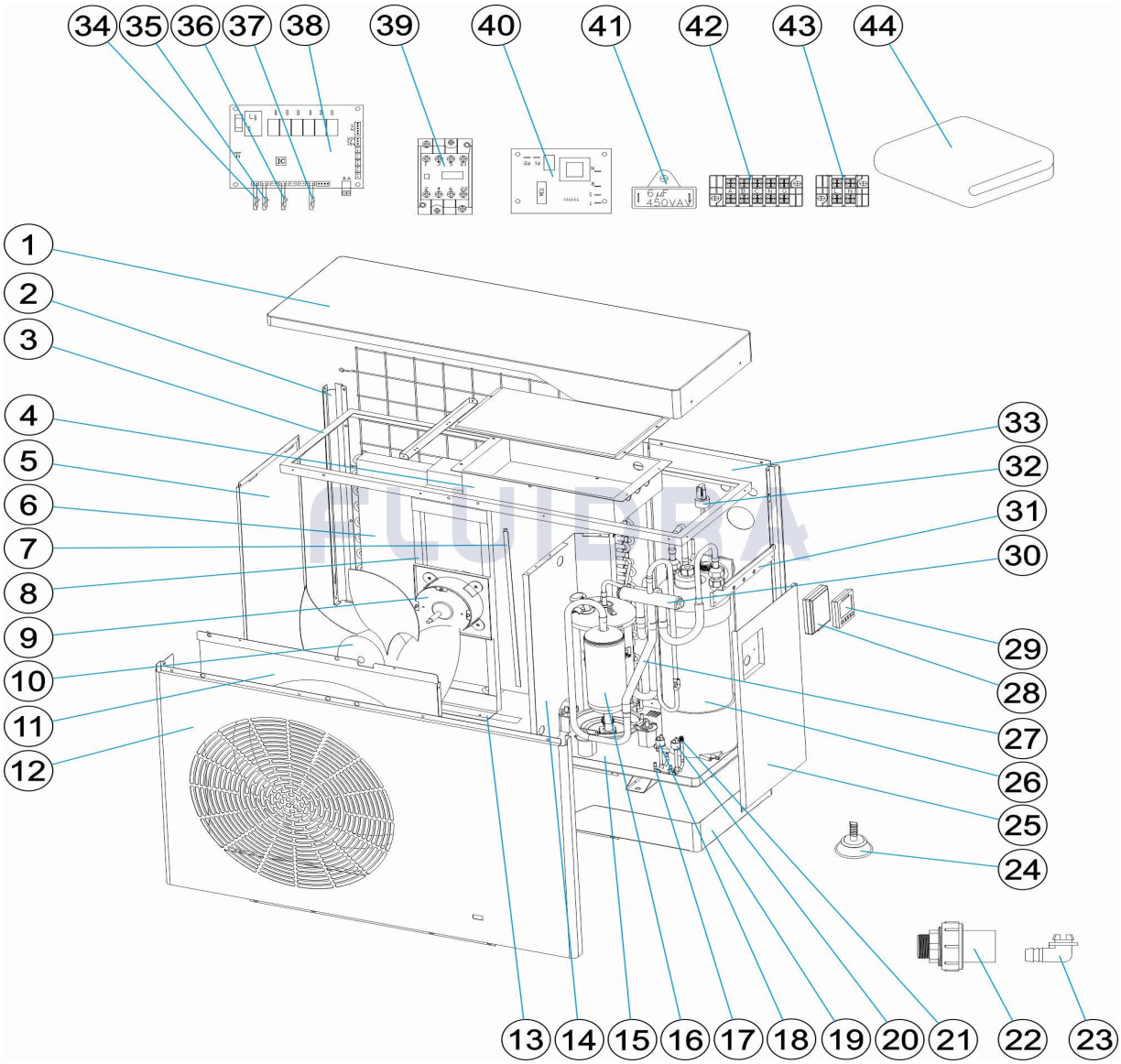

DEUTSCH

POS	CODE	BESCHREIBURG MENGE	POS	CODE	BESCHREIBURG MENGE
1	66069R0334	ABDECKUNG OBEN	16	66074R0040	KOMPRESSOR
2	66069R0348	HALTERUNG FÜR PLATTE LINKS	17	66069R0015	VERROHRUNG DRUCKSCHALTER
3	66069R0335	ABDECKUNG OBEN	18	66069R0031	SCHALTER HOCHDRUCK
4	66069R0352	ELEKTRONIKSCHRANK	19	66069R0349	ABDECKUNG BASIS
5	66069R0337	LINKENPLATTE	20	66069R0032	SCHALTER TIEFDRUCK
6	66074R0038	VERDAMPFER	21	66069R0022	VENTIL BEFÜLLUNG/ENTLEERUNG
7	66069R0351	HALTERUNG FRONTPLATTE	22	66069R0041	ANSCHLUSS WASSER
8	66069R0338	HALTERUNG MOTORVENTILATOR	23	66069R0042	ABLASS KONDENSWASSER
9	66074R0039	VENTILATORMOTOR	24	66069R0102	ANTI-VIBRATIONSFÜSSE
10	66074R0009	ROTORBLÄTTER VENTILATOR	25	66069R0344	RECHTENPLATTE
11	66069R0341	VENTILATORGITTER	26	66074R0041	WÄRMEÜBERTRAGER TITANIUM
12	66069R0340	FRONTPLATTE	27	66074R0042	VERROHRUNG WÄRMEÜBERTRAGER
13	66069R0039	HEIZSTAB ENTEISER	28	66069R0262	WASSERDICHTE STEUERUNGSBOX

CODE **WH000425**

BESCHREIBURG: **WÄRMEPUMPE PM40**

14	66069R0339	ZWISCHENPLATTE	29	66069R3304	DRIVER LCD (PM40)
15	66069R0353	UNTERPLATTE	30	66073R0013	4-WEGE-VENTIL
31	66069R0350	ANSCHLUSS ABDECKUNG OBEN PLAKETT	38	66069R0060	BASISPLATTE PCB
32	66069R0030	DURCHFLUSSMESSER	39	66069R0354	AC SCHÜTZ
33	66069R0346	FÜHRERHAUSRÜCKWAND	40	66073R0037	PHASENSCHUTZ PCB
34	66069R0054	TEMPERATURFÜHLER L=1200	41	66073R0025	VENTILATORKONDENSATOR (6 UF)
35	66069R0055	TEMPERATURFÜHLER L=1200	42	66073R0036	ANSCHLUSS
36	66069R0057	TEMPERATURFÜHLER L=800	43	66069R0053	ANSCHLUSS FÜR PUMPE
37	66069R0347	TEMPERATURFÜHLER L=2000	44	ACXXPR1005	WINTERDECKEL EV25/AC25/ST20-25/MD-T

CODIGO **WH000425**

DESCRICÃO: **BOMBA DE CALOR PM40**

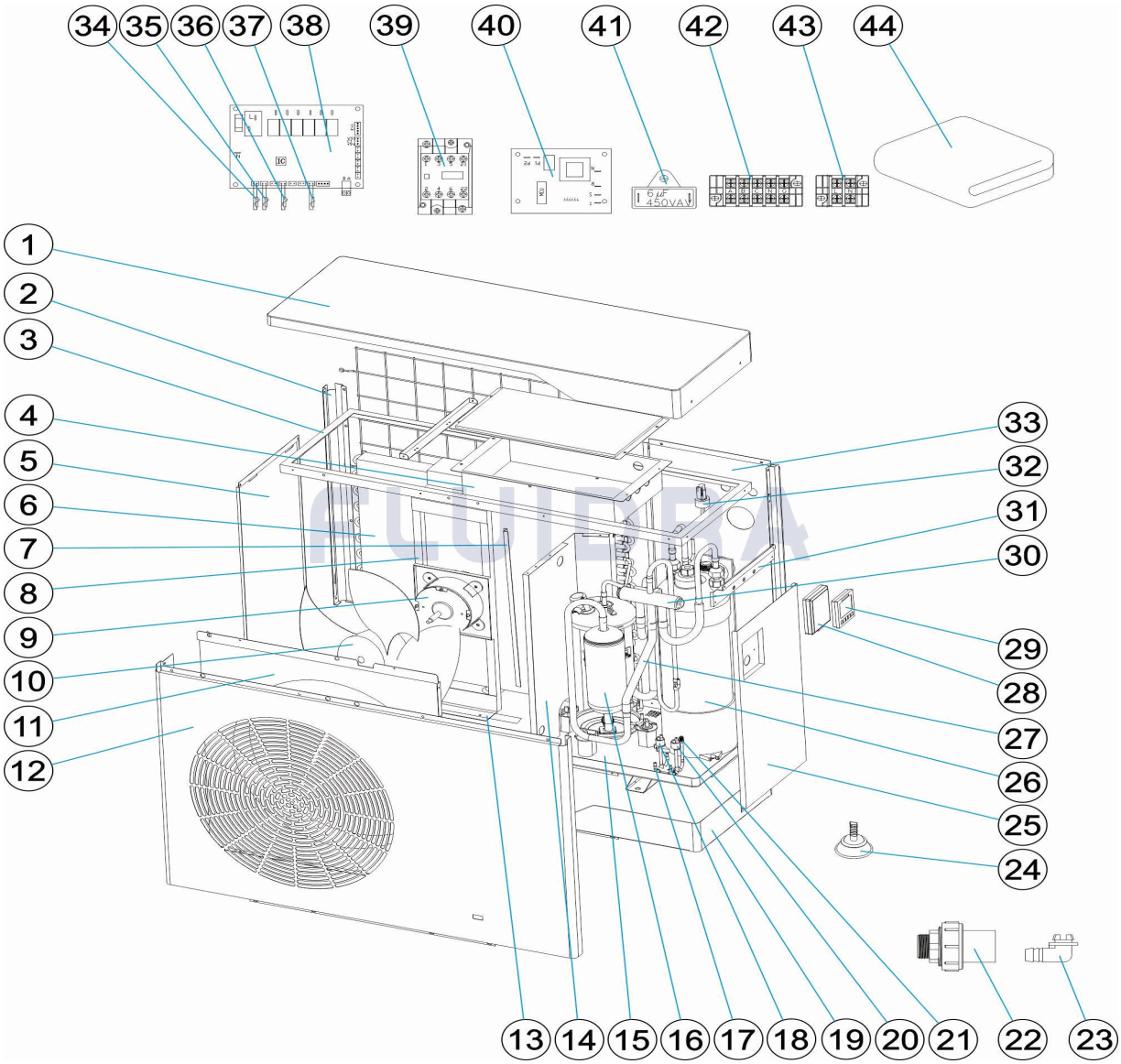

PORTUGUES

POS	CODIGO	DESCRICÃO	JANTIDADE	POS	CODIGO	DESCRICÃO	JANTIDADE
1	66069R0334	TAMPA SUPERIOR		16	66074R0040	COMPRESSOR	
2	66069R0348	SUPORTE PARA PAINEL ESQUERDO		17	66069R0015	TUBAGENS PARA PRESSÓSTATO	
3	66069R0335	TAMPA SUPERIOR		18	66069R0031	INTERRUPTOR ALTA PRESSÃO	
4	66069R0352	CAIXA ELÉTRICA		19	66069R0349	TAMPA FUNDO	
5	66069R0337	PAINEL ESQUERDO		20	66069R0032	INTERRUPTOR BAIXA PRESSÃO	
6	66074R0038	EVAPORADOR		21	66069R0022	VÁLVULA PARA ESVAZIAR/ENCHER	
7	66069R0351	SUPORTE PAINEL FRONTAL		22	66069R0041	TOMADA DE ABASTECIMENTO DE ÁGUA	
8	66069R0338	SUPORTE PARA VENTILADOR MOTOR		23	66069R0042	PURGA ÁGUA CONDENSAÇÃO	
9	66074R0039	MOTOR VENTILADOR		24	66069R0102	PÉS ANTIVIBRAÇÃO	
10	66074R0009	PÁS VENTILADOR		25	66069R0344	PAINEL DIREITO	
11	66069R0341	GRADE VENTILADOR		26	66074R0041	PERMUTADOR DE TITÂNIO	
12	66069R0340	PAINEL FRONTAL		27	66074R0042	TUBAGENS PARA PERMUTADOR	
13	66069R0039	RESISTÊNCIA DESCONGELAÇÃO		28	66069R0262	CAIXA DE CONTROLE IMPERMEÁVEL	

CODIGO **WH000425**

DESCRICÃO: **BOMBA DE CALOR PM40**

14	66069R0339	PAINEL PARTIÇÃO	29	66069R3304	CONTROLADOR LCD (PM40)
15	66069R0353	PAINEL INFERIOR	30	66073R0013	VÁLVULA DE 4 VIAS
31	66069R0350	CONEXÃO PLACA TAMPA SUPERIOR	38	66069R0060	PLACA BASE PCB
32	66069R0030	COMUTADOR DO CAUDAL DA ÁGUA	39	66069R0354	CONTATOR AC
33	66069R0346	PAINEL TRASEIRO	40	66073R0037	PROTEÇÃO DE FASES PARA PCB
34	66069R0054	SENSOR TEMPERATURA L=1200	41	66073R0025	CONDENSADOR VENTILADOR (6UF)
35	66069R0055	SENSOR TEMPERATURA L=1200	42	66073R0036	TERMINAL DE POTÊNCIA
36	66069R0057	SENSOR TEMPERATURA L=800	43	66069R0053	TERMINAL PARA BOMBA
37	66069R0347	SENSOR TEMPERATURA L=2000	44	ACXXPR1005	COBERTURA DE INVERNO EV25/AC25/ST2(